Manual and Automatic Light Communication Systems

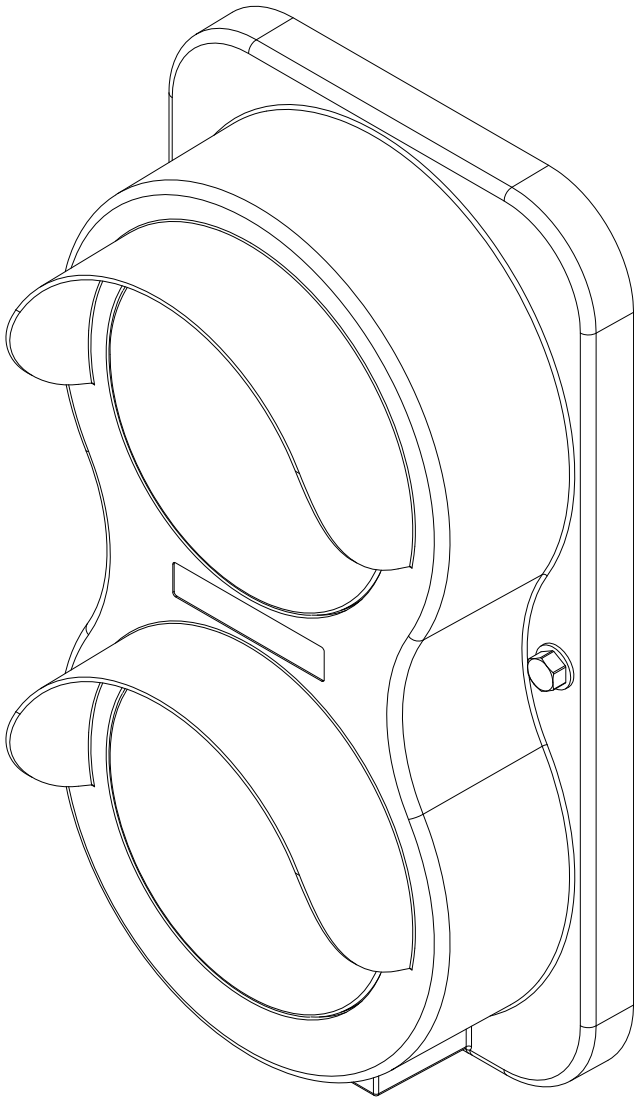

This manual applies to MLS/ALS units manufactured beginning February 1, 2010.

⚠WARNING

Do not install, operate or service this product unless you have read and understand the Safety Practices, Warnings, Installation and Operating Instructions contained in this User's Manual. Failure to do so could result in death or serious injury.

User's Manual

Installation, Operations, Maintenance and Parts

Part No. 6005099B

TABLE OF CONTENTS

Table of Contents....2
Introduction....2
Safety Signal Words....2
Safety Practices....3
Installation....4
Operating Instructions....7
Operating Instructions — ALS1....7
Wiring Diagram —ALS1....12
Operating Instructions — ALS2....14
Wiring Diagram —ALS2....18
Operating Instructions — AMLS....20
Wiring Diagram —AMLS....23
Operating Instructions — MLS....25
Wiring Diagram —MLS....27
Parts List....29
Warranty Information....35
Distributor Information....36

INTRODUCTION

Welcome and thank you for choosing this light system.

This User's Manual contains information that you need to safely install, operate and maintain the light system. It also contains a complete parts list and information about ordering replacement parts. Please keep and read this User's Manual before using your new light system.

SAFETY SIGNAL WORDS

You may find safety signal words such as DANGER, WARNING, CAUTION or NOTICE throughout this Owner's Manual. Their use is explained below:

This is the safety alert symbol. It is used to alert you to potential personal injury hazards. Obey all safety messages that follow this symbol to avoid possible death or injury.

⚠DANGER

Indicates an imminently hazardous situation which, if not avoided, will result in death or serious injury.

⚠WARNING

Indicates a potentially hazardous situation which, if not avoided, could result in death or serious injury.

⚠CAUTION

Indicates a potentially hazardous situation which, if not avoided may result in minor or moderate injury.

NOTICE

Notice is used to address practices not related to personal injury.

©2011 4Front Engineered Solutions, Inc.

SAFETY PRACTICES

⚠WARNING

Read these safety practices before installing, operating or servicing the light system. Failure to follow the safety practices could result in serious injury or death.

READ AND FOLLOW THE INSTRUCTIONS CONTAINED IN THIS MANUAL BEFORE INSTALLING, OPERATING OR SERVICING THE LIGHT SYSTEM. If you do not understand the instructions, ask your supervisor to teach you how to use the light system or call your local distributor.

Improper installation of the light system could result in death or serious injury to dock workers or other users of the light system.

Be certain to follow the installation instructions in this manual.

INSTALLATION AND OPERATION

Use by untrained people can cause property damage, bodily injury and/or death. Your supervisor should teach you the safe and proper way to use the light system. Read and follow the complete OPERATION INSTRUCTIONS for your model found in this User's Manual before use. DO NOT USE THE LIGHT SYSTEM IF IT IS NOT WORKING CORRECTLY. Tell your supervisor it needs repair.

Always CHOCK TRUCK WHEELS or lock the truck to the dock with a truck restraint, and set the vehicle brakes before loading or unloading the truck.

If during the installation, operation, or maintenance of the light system, there are any questions about the operation, performance or procedures, contact your supervisor or your local distributor for clarification and/or repair.

Before chocking wheels or engaging vehicle restraint, dump air from air ride suspensions and set parking brake.

MAINTENANCE AND SERVICE

Place barricades around pit on dock floor and drive while installing, maintaining or repairing the light system.

Do not stand in the driveway between the dock and backing truck.

All electrical troubleshooting and repair must be done by a qualified technician and meet all applicable codes.

Before doing any electrical work (including changing bulbs), make certain the power is disconnected and properly tagged or locked off.

©2011 4Front Engineered Solutions, Inc.

INSTALLATION

STANDARD WALL MOUNTING PROCEDURE

NOTE:

Refer to wiring diagram found in this User's Manual for your model of light system for all field wiring connections between control panel, outside light and any interlocking switches.

1. Mount control panel inside the building 5 feet above the floor, just to the left of the doorway from inside. See Fig. 2.

2. Mount and wire outside 24V signal light assembly to the control box using terminals 7 for red, 8 for green, and 9 for common on the terminal strip in the control panel. Always mount the light assembly with the red light on top and the green light on the bottom. Seal the inside building wall around the conduit. See Fig. 1 and 2.

⚠WARNING

Do not install, operate or service this product unless you have read and followed the Safety Practices, Warnings, and Installation and Operation Instructions in this manual. Failure to do so could result in death or serious injury.

3. Permanently mount the vehicle driver's instruction sign on the outside wall (below the signal light when installing RED/GREEN Light Assembly). See Fig. 2.

Fig. 1

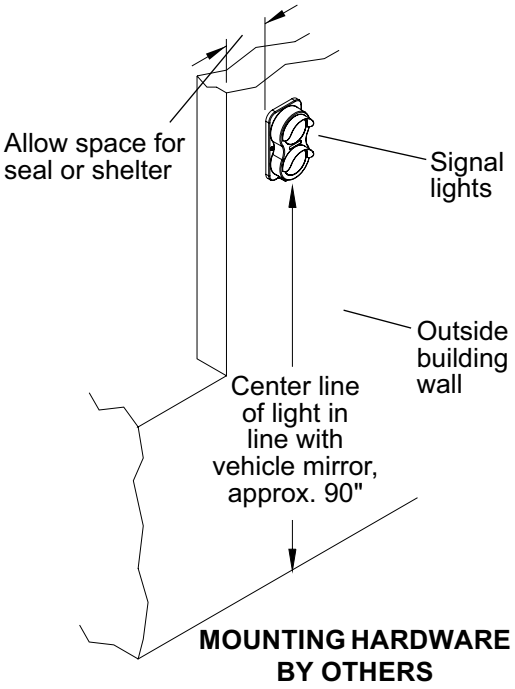

Fig. 2

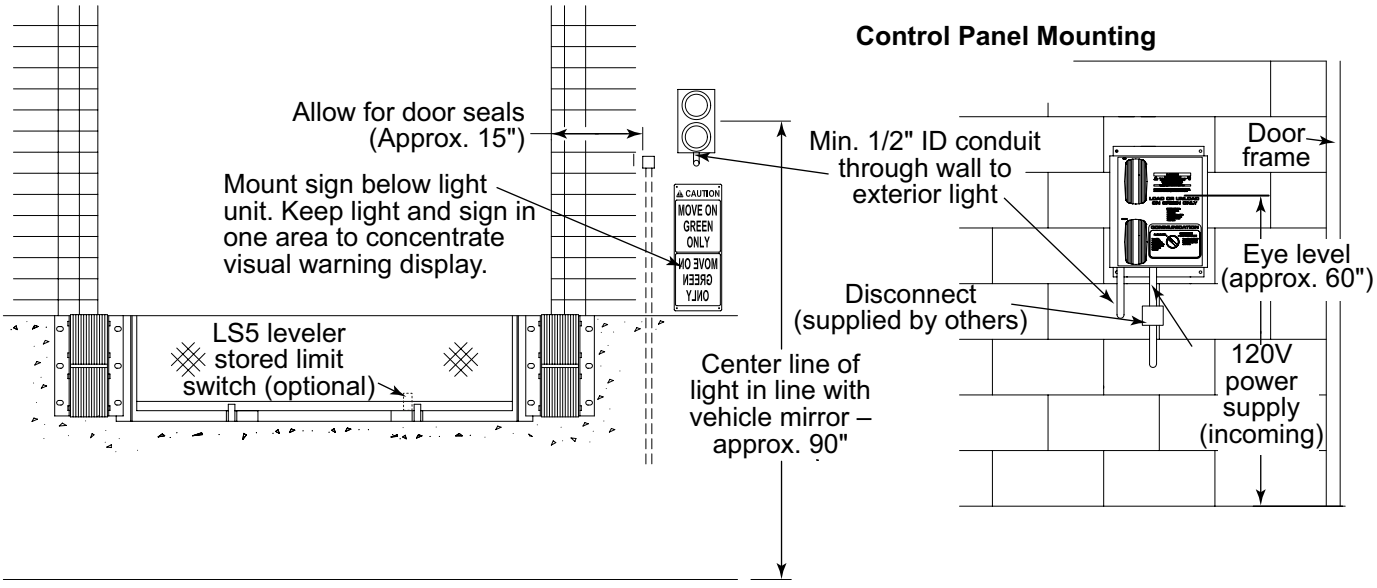

©2011 4Front Engineered Solutions, Inc.

Refer to the proper steps below for your model of light system.

For MLS light systems (6006577, 6010117) skip to installation step 9. See pages 25-28.

For ALS1 systems (629730, 6010114) with single limit switch interconnect proceed to installation step 4. See pages 7-13.

For ALS2 systems (629731, 6010115) with dual limit switch interconnect proceed to installation step 6. See pages 14-19.

For special AMLS systems (629732, 6010116) with single limit switch proceed to installation step 8. See pages 20-24.

4. On ALS1 systems (629730, 6010114) mount either a door opened limit switch 625208 OR a leveler stored limit switch 6001225 and bracket (each sold separately) and wire per wiring diagram on page 13.

5. Proceed to step 9.

6. For ALS2 systems (629731 , 6010115) there are two options for control.

   a. Option 1 — Mount BOTH a door opened limit switch 625208 (to sense the door fully opened) AND a leveler stored limit switch 6001225 and bracket (each sold separately) and wire per the wiring diagram on page 19.

   b. Option 2 — Mount BOTH a door closed limit switch 625208 (to sense the door fully closed) AND a door opened limit switch 625208 (to sense the door fully opened) each sold separately and wire per the wiring diagram on page 19.

7. Proceed to step 9.

8. For AMLS systems (629732, 6010116) with single limit switch, mount a door opened limit switch 625208 (sold separately) and wire per the wiring diagram on page 24.

⚠DANGER

Before doing any electrical work, make certain the power is disconnected and properly locked or tagged off.

Failure to do so may result in death or serious injury. All electrical work must be done by a qualified technician and must meet all applicable codes.

Do not route control wiring for any other device through this control panel unless properly shielded.

Be certain power is off when wiring to the control panel or signal lights. Failure to do so could result in electrical shock, death or serious injury.

9. Wire power to the control panel through a fused disconnect (supplied by others) using terminals provided in the control panel. See wiring diagram for your model light system located in this user's manual. Turn the power on.

10. Check for proper operation. The proper lights must be on, inside and outside, at all times. Operate the light system following the operating instructions located in this user's manual for your model light system. Check for proper operation according to the operating instructions and optional interlocking installed.

11. If the light system does not operate properly, TURN OFF POWER TO LIGHTS and rewire as required. Repeat step 10 above.

12. When you have tested the system and it is operating properly, instruct the dock workers how to use the light system using the proper operating procedures located in this user's manual for the correct model light system.

13. If a powered dock leveler is installed, the dock leveler control circuit can be interrupted and wired through the leveler interlock terminals (13 and 14 or 15 and 16 in the control panel, depending on your model of light system). Max. current capability of the interlock output is 0.5A.

LEVELER STORED SENSOR INSTALLATION

NOTE:

A Leveler Stored sensor can be mounted beneath hydraulic dock levelers that have lip keepers (except PAL). as shown in Fig. 3. For all others, call your authorized distributor.

©2011 4Front Engineered Solutions, Inc.

INSTALLATION, continued

1. Weld the leveler stored sensor bracket as shown. Attach the face of the sensor so when the lip is stored the face of the sensor is 3/4" from lip for 6' and 8' levelers and 1" for 10' levelers. See Fig. 3.

2. The switch is supplied with a four conductor wire attached. Only 3 of these conductors will be used. A junction box must be installed beneath the leveler to protect the connections of the wire extensions.

3. For Normally closed switch applications the BLACK wire will connect to the circuit board input, the BROWN wire connects to terminal “C” and the BLUE wire connects to the “0V” terminal. The WHITE wire is not used.

   a. The associated board input LED will go on when the leveler is not in the stored position.

DOOR OPENED AND CLOSED SENSORS INSTALLATION

NOTE:

Door opened and closed sensors can be mounted with this method to doors with standard track installations. For all others, call your authorized distributor.

1. Locate the track mounting bracket that is closest to the location required by the specific system being installed. If a bracket does not exist one must be installed.

2. Drill a 3/4" hole through the bracket directly beside the door panel. See Fig. 4.

3. Mount the switch through the hole so it looks directly at the side of the door panel.

4. Neatly connect the attached cable away from all moving door components down the wall to the control panel.

5. For normally closed switch applications the WHITE wire will connect to the circuit board input, the BROWN wire connects to terminal “C” and the BLUE wire connects to the “0V” terminal. The BLACK wire is not used.

   a. The best sensing distance of the switch is 2". The associated board input LED will go on when the door panel is not in front of the sensor face.

6. For Normally Opened switch applications the BLACK wire will connect to the circuit board input, the BROWN wire connects to terminal “C” and the BLUE wire connects to the “0V” terminal. The WHITE wire is not used.

   a. The best distance of the switch is 2". The associated board input LED will go on when the door panel is in front of the sensor face.

Fig. 3

6' and 8' Levelers

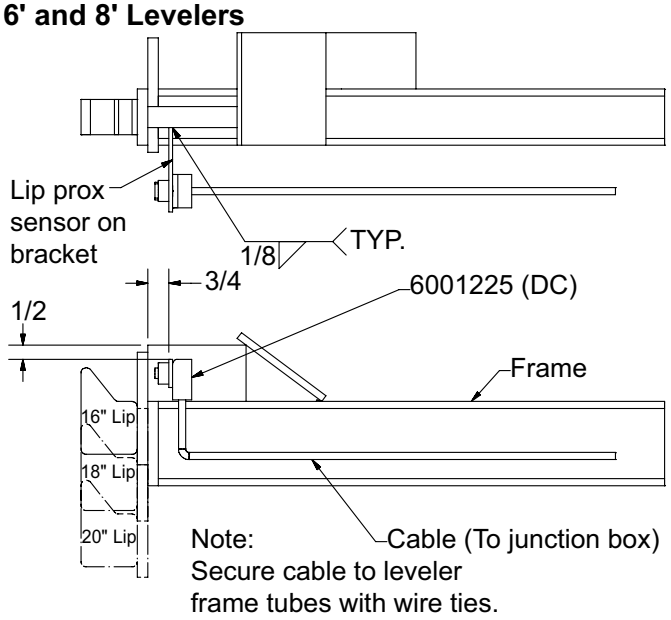

10' Levelers

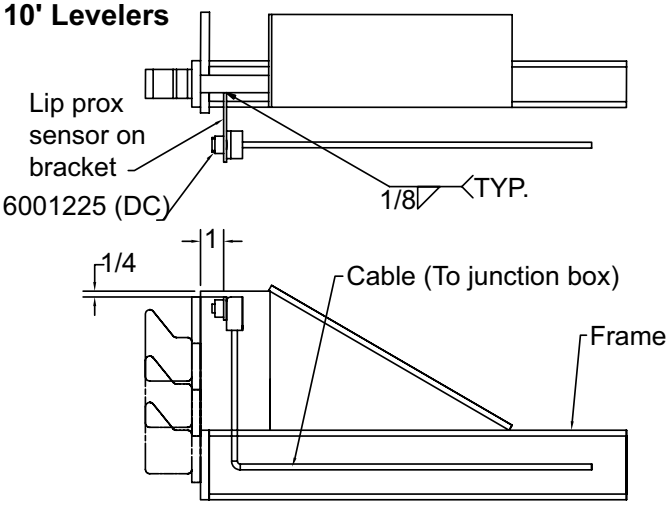

Fig. 4

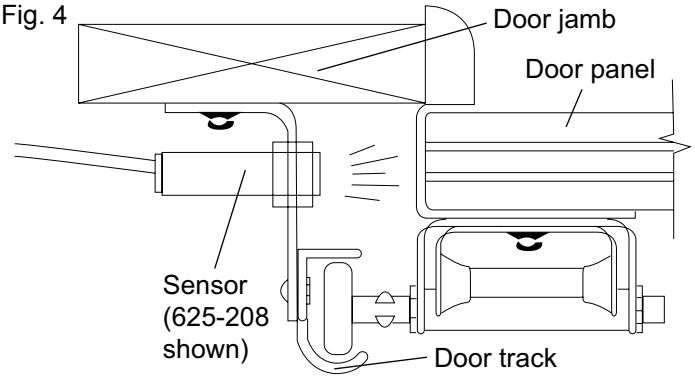

©2011 4Front Engineered Solutions, Inc.

⚠WARNING

Before operating the light system, read and follow the Safety Practices, Warnings, and Operation instructions contained in this manual. Use by untrained people could result in death or serious injury.

Do not use the light system if it looks broken or does not seem to work right. Tell your supervisor right away.

Vehicles not restrained move unexpectedly. Vehicles leaving or moving when loading and unloading are in process could result in death or serious injury.

Do not load or unload any vehicle unless you make certain a vehicle restraint or wheel chock has securely restrained the vehicle and set the brakes.

Before chocking wheels or engaging vehicle restraint, dump air from air ride suspensions and set parking brakes.

Enter vehicle only after making certain the vehicle is restrained (or chocked) and the light controls indicate a GREEN inside light and brakes are set. Vehicles not restrained move unexpectedly. If the lights are not properly switched the vehicle driver will see a GREEN light and could pull out unexpectedly.

Fig. 5

OUTSIDE LIGHTS AND SIGN

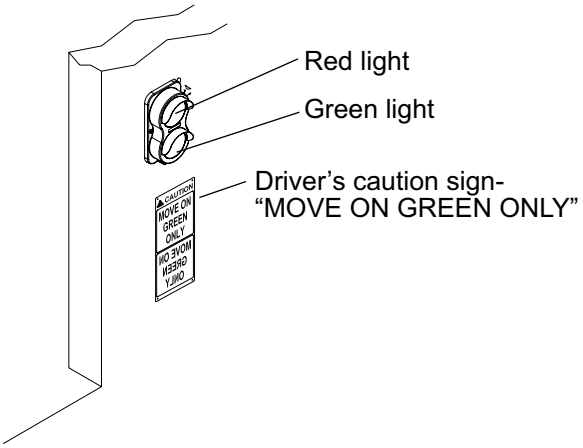

CONTROL PANEL (varies depending on model)

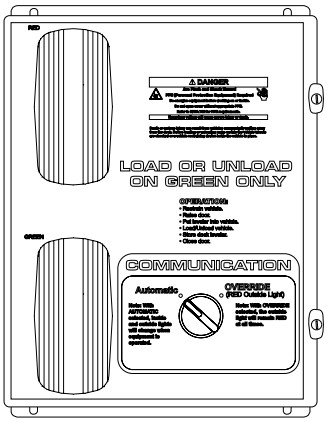

©2011 4Front Engineered Solutions, Inc.

OPERATION INSTRUCTIONS — ALS1

Simplified Instructions

ALS1 (SERCO P/N 629730; KELLEY P/N 6010114)

1. Restrain vehicle (with vehicle restraint or wheel chocks).

⚠ WARNING

Before loading or unloading make certain that the vehicle wheels are chocked or a vehicle restraining device holds the vehicle in place.

2. Raise door.

   - If a door open limit switch is used, the inside light will change to solid Green and the outside light will change to flashing Red when the door is opened.

   - If interlock output is wired into a dock leveler controller, dock leveler the leveler control circuit is now enabled.

3. Put dock leveler into vehicle.

   - If interlocked to a leveler stored switch, the inside light will change to solid Green and the outside light will change to flashing Red when the leveler lip is positioned outside the Lip Locks (i.e. outside the storage position)

   - When interlocked to a leveler stored switch auxiliary interlock contacts are now enabled.

4. Load/Unload vehicle.

5. Store dock leveler.

   - If interlocked to a leveler stored switch the inside light will change to solid Red and the outside light will change to a flashing Green when the leveler is returned to its storage position.

   - When interlocked to a leveler stored switch auxiliary interlock contacts are now disabled.

6. Close Door.

   - If interlocked to a door open switch the inside light will change to solid Red and the outside light will change to a flashing Green when door is closed.

   - When interlocked to a door open switch, dock leveler motor is now disabled.

7. Remove vehicle restraint or wheel chocks.

Fig. 6

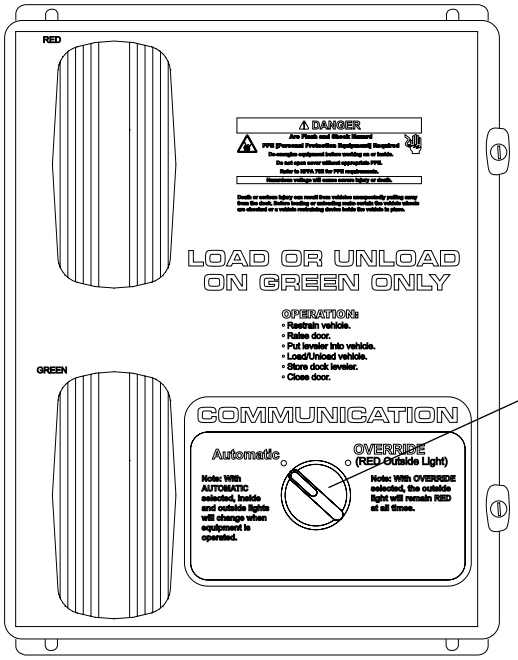

NOTE:

The selector switch “Override (Red Outside Light)” position is only used to force the exterior lights Red when the Leveler is stored. This is used as a signal to outside of the Dock that it is closed and not ready to accept vehicles or to retain vehicles. The selector switch has no effect upon the interior Green Light.

The interior Green light will only be on; when the Leveler is positioned outside of the lip keepers, (either on the vehicle or in the end loading position) when interlocked with a leveler stored switch; OR when the door is open, when interlocked with a door open switch.

©2011 4Front Engineered Solutions, Inc.

ALS1 (SERCO P/N 629730; KELLEY P/N 6010114)

NOTE:

This control panel has only two approved control options. Any other installation or operation of this equipment must be reviewed and approved by the manufacturer.

INTRODUCTION

A single limit switch closes changing both the inside and outside communications lights automatically. The selector switch can be manually turned to force the outside lights to red but the inside lights will remain Red and the interlock contacts will remain open unless the single limit switch is closed.

NOTE:

Photoelectric limit switch state is open when the door is closed. The limit switch contacts close when the door is opened. (switch no longer “SEES” the door)

OPTION 1:

LS1 = Door Open Switch (625208) - When the dock door is opened the inside lights switch to display solid Green, the outside lights switch to display flashing Red and the Interlock terminals 13-14 close.

1. Restrain vehicle (with vehicle restraint or wheel chocks).

⚠WARNING

Before loading or unloading make certain that the vehicle wheels are chocked or a vehicle restraining device holds the vehicle in place.

2. Raise/Open Door

   - When the door is opened, LS1 opens and the inside light will change to solid Green and the outside light will change to flashing RED.
   - The LED’s for LS1 and Interlock go on.
   - If the Interlock output is wired into a Dock Leveler controller, dock leveler and leveler control circuit is now enabled.

3. Position Dock Leveler into vehicle.
4. Load/Unload vehicle.
5. Restore dock Leveler to the stored position.
6. Lower/Close Door.

Fig. 7

Limit Switch
Mounting Locations

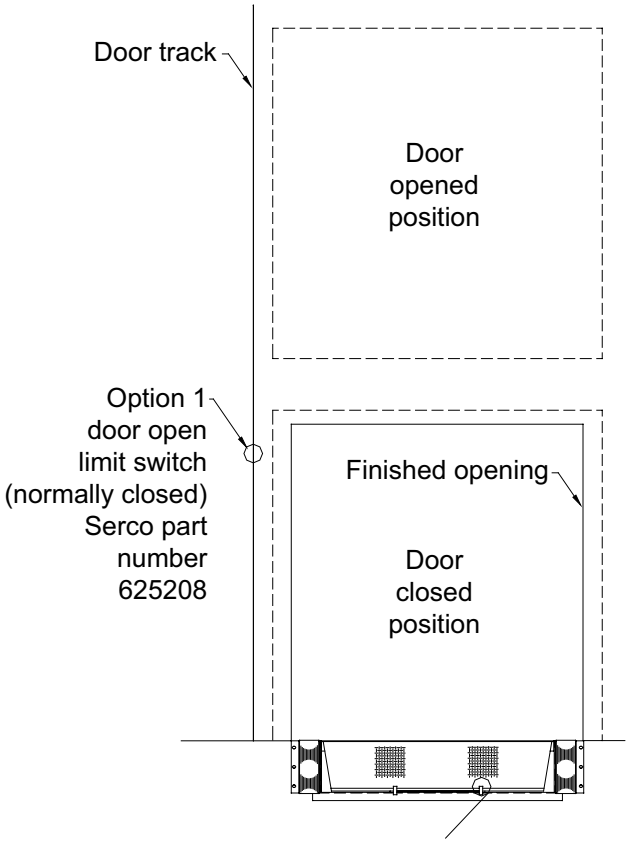

Option 2 leveler stored limit switch
(normally closed) Serco part number 6001225

Fig. 8

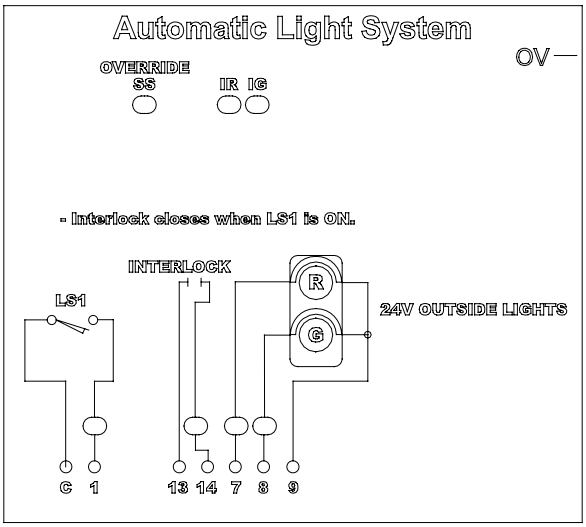

©2011 4Front Engineered Solutions, Inc.

- When the door is closed, LS1 closes and the inside light will change to solid Red and the outside light will change to flashing Green.
- The LED's for LS1 and Interlock go off.
- If the Interlock output is wired into a Dock Leveler controller, dock leveler and leveler control circuit is now disabled.

7. Remove vehicle restraint or wheel chocks.

OPTION 2:
LS1 = Leveler Stored Switch (6001225) - When the leveler is removed from the stored position the inside lights switch to display solid Green, the outside lights switch to display flashing Red and the Interlock terminals 13-14 close.

NOTE:

Photoelectric limit switch state is open when the Leveler is stored. The limit switch contacts close when the Leveler is NOT in the stored position.

1. Restrain vehicle (with vehicle restraint or wheel chocks).

⚠WARNING

Before loading or unloading make certain that the vehicle wheels are chocked or a vehicle restraining device holds the vehicle in place.

2. Raise/Open Door
3. Position Dock Leveler into vehicle.
   - When the lip is positioned outside the lip keepers (outside the stored position) the inside light will change to solid Green and the outside light will change to flashing RED.
   - The LED's for LS1 and Interlock go on.
   - Interlock contacts 13-14 are now enabled.
4. Load/Unload vehicle.

Fig. 9

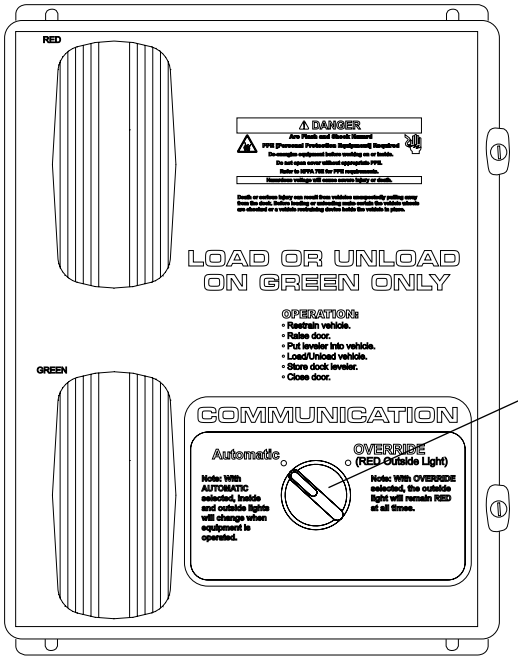

NOTE:

The selector switch "Override (Red Outside Light)" position is only used to force the exterior lights Red when the Leveler is stored. This is used as a signal to outside of the Dock that it is closed and not ready to accept vehicles or to retain vehicles. The selector switch has no effect upon the interior Green Light.

The interior Green light will only be on; when the Leveler is positioned outside of the lip keepers, (either on the vehicle or in the end loading position) when connected to a leveler stored switch; OR when the door is opened, when connected to a door opened switch.

©2011 4Front Engineered Solutions, Inc.

5. Restore dock Leveler to the stored position.

   • When the leveler lip is positioned into the lip keepers. (i.e. in the storage position), LS1 opens and the inside lights change to solid Red and the outside light will change to flashing Green.

   • The LED's for LS1 and Interlock go off.

   • Interlock contacts 13-14 are now disabled.

6. Lower/Close Door.

7. Remove vehicle restraint or wheel chocks.

ALS1 LOGIC CHART

Switch Conditions	Inside RED "IR"	Inside GREEN "IG"	Outside RED	Outside GREEN	INTERLOCK
NOTHING ON	X			F	
LS1 ON Only		X	F		X
Selector Switch "SS" ON Only	X		F		
Selector Switch "SS" and LS1 ON		X	F		X

LS1 = Door opened Limit Switch (625208) Closed when door is open
or
LS1 = Leveler Stored Limit Switch (6001225) Closed when leveler is NOT stored.

Logic Chart Legend: X = ON F= Flashing

Int 1 = Interlock Terminals 13 to 14 (Dry Contacts)

©2011 4Front Engineered Solutions, Inc.

WIRING DIAGRAM — ALS1

ALS1 (SERCO P/N 629730; KELLEY P/N 6010114)

⚠DANGER

Before doing any electrical work, make certain the power is disconnected and properly tagged or locked off. All electrical work must be done by a qualified technician and meet all applicable codes. If it is necessary to make troubleshooting checks inside the control box with the power on, USE EXTREME CAUTION. Do not place your fingers or uninsulated tools inside the control box. Touching wires or other parts inside the control box could result in electrical shock, death or serious injury.

Fig. 10

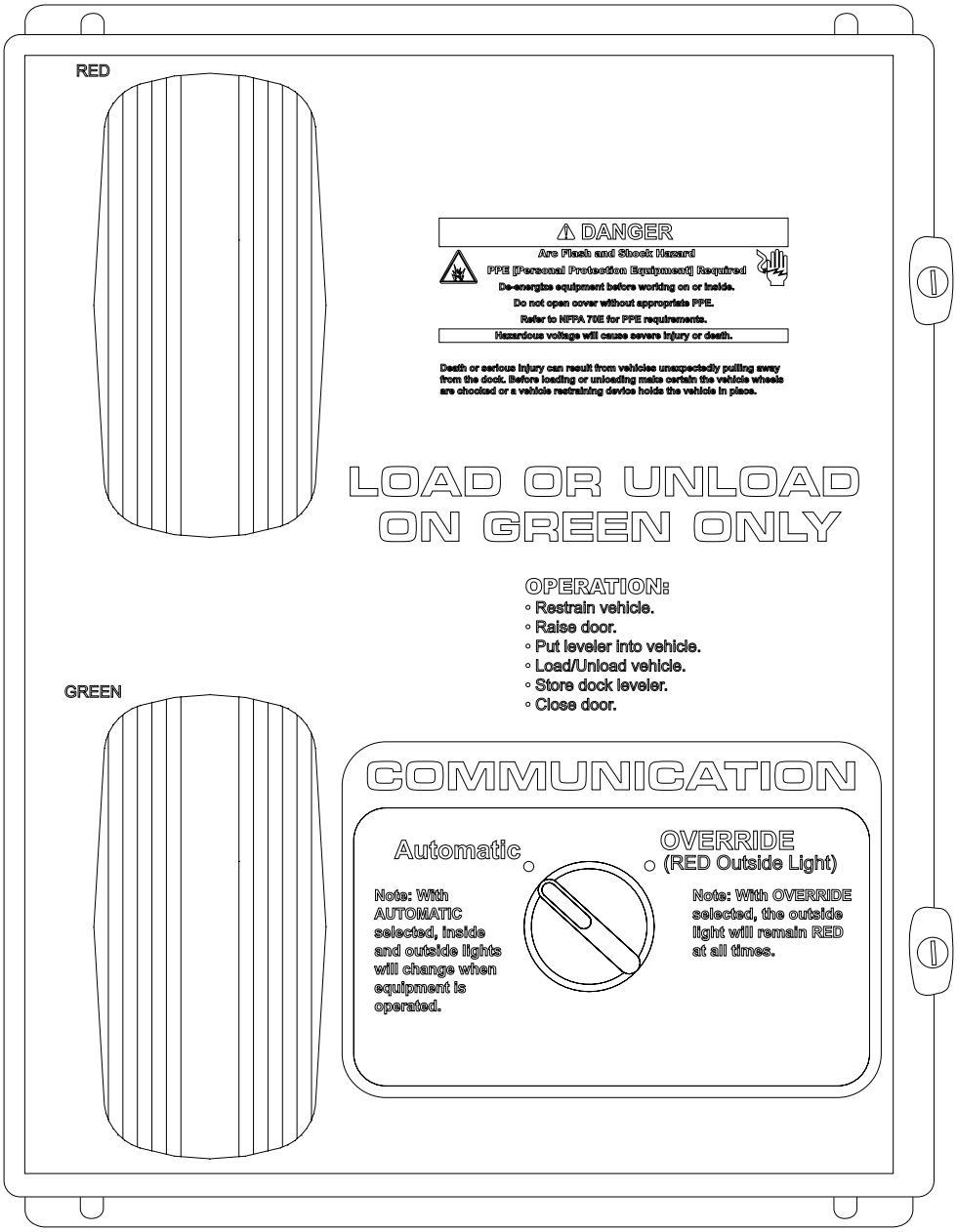

©2011 4Front Engineered Solutions, Inc.

ALS1 (SERCO P/N 629730; KELLEY P/N 6010114)

Fig. 11

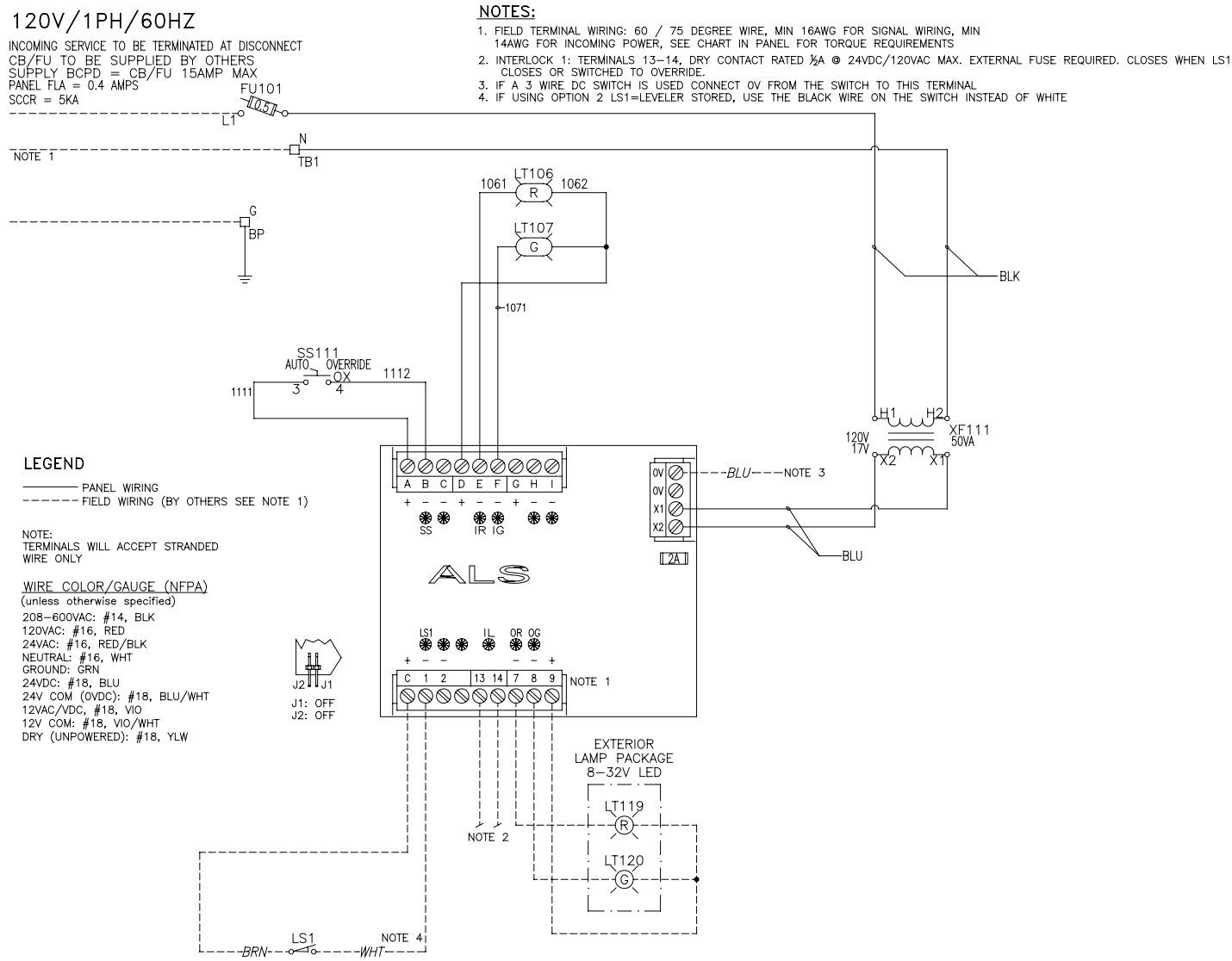

NOTE:

For 24V incoming power consult factory.

NOTE:

Power to control panel must be from fused disconnect supplied by others. All electrical work must meet all applicable codes. All devices shown in de-energized state.

©2011 4Front Engineered Solutions, Inc.

OPERATION INSTRUCTIONS — ALS2

Simplified Instructions

ALS2 (SERCO P/N 629731; KELLEY P/N 6010115)

1. Restrain vehicle (with vehicle restraint or manual wheel chocks).

⚠ WARNING

Before loading or unloading make certain that the vehicle wheels are chocked or a vehicle restraining device holds the vehicle in place.

2. Raise door.

   - If interlocked to a door opened switch and leveler stored switch the inside light will remain solid Red and the outside light will change to flashing Red when the door is opened.

   - If interlocked to a door not closed switch and a door open switch, the auxiliary equipment (inflatable seal or dock light) is enabled and the outside light will change to flashing Red, and when the door is fully opened, the inside light will change to solid Green.

     Dock leveler motor is enabled.

3. Put dock leveler into vehicle.

   - If interlocked to a door opened switch and leveler stored switch the inside light will change to solid Green.

4. Load/Unload vehicle

5. Store dock leveler.

   - If interlocked to a door opened switch and leveler stored switch the inside light will change to solid Red when the leveler is returned to its storage position.

6. Close Door.

   - If interlocked to a door opened switch and leveler stored switch the outside light will change to flashing Green when the door is closed.

   - If interlocked to a door not closed switch and a door open switch, the auxiliary equipment (inflatable seal or dock light) is disabled when the door fully closes and the outside light will change to flashing Green.

   - Dock leveler motor is disabled.

7. Remove vehicle restraint or wheel chocks.

Fig. 12

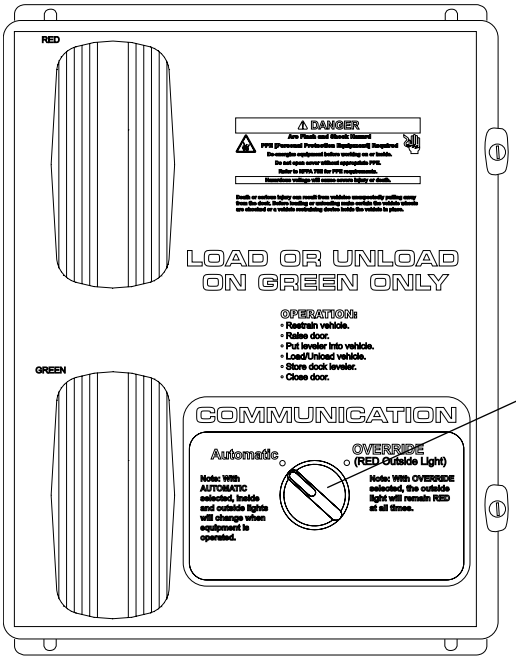

NOTE:

The selector switch “Override/(Red Outside Light)” position is only used to force the exterior lights Red when the Leveler is stored and/or when the door is closed. This is used as a signal to outside of the Dock that it is closed and not ready to accept vehicles or to restrain vehicles. The selector switch has no effect upon the interior Green Light.

The interior Green light will only be on; when the Leveler is positioned outside of the lip keepers, (either on the vehicle or in the end loading position) AND the door is open.

When the inside light is Green the panels second set of auxiliary contacts are closed.

©2011 4Front Engineered Solutions, Inc.

ALS2 (SERCO P/N 629731; KELLEY P/N 6010115)

NOTE:

This control panel has only two approved control options. Any other installation or operation of this equipment must be reviewed and approved by the manufacturer.

INTRODUCTION

Two separate limit switches are connected to the system. LS2 switches the outside lights and closes the leveler interlock terminals 15-16 (LED- CR, the terminals are located on the terminal strip on the backplate). LS1 switches the inside lights and closes the auxiliary terminals 13-14 (LED- Auxiliary, the terminals are located on the circuit board). When LS1 is open the selector switch can be manually turned to force the outside lights to red but the inside lights will remain Red and the leveler interlock terminals 15-16 will remain open unless LS2 is closed.

OPTION 1

LS2 = Door Opened Switch (625208) - When the dock door is opened LS2 closes and the inside lights continue to display solid Red, the outside lights switch to display flashing Red and the Leveler Interlock terminals 15-16 close.

LS1 = Leveler Stored Switch (6001225) – When the leveler is removed from the stored position LS1 closes and the inside lights switch to display solid Green, the outside lights continue to display flashing Red and the Auxiliary terminals 13-14 close.

1. Restrain vehicle (with vehicle restraint or wheel chocks).

⚠WARNING

Before loading or unloading make certain that the vehicle wheels are chocked or a vehicle restraining device holds the vehicle in place.

2. Raise/Open Door

•When the door is fully opened LS2 closes and the LEDs for LS2 and CR go on.

- The inside light will remain solid Red and the outside light will change to flashing RED.
- The Leveler Interlock terminals 15-16 close. If they are interconnected to a Dock Leveler controller, dock leveler and leveler control circuit is now enabled.

3. Position Dock Leveler into vehicle.

Fig. 13

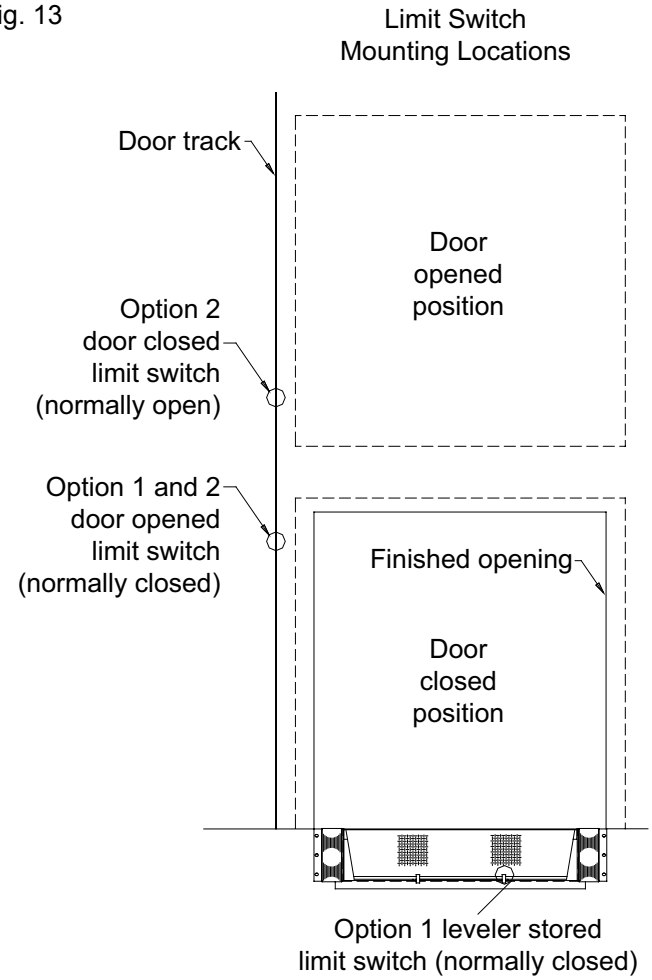

Fig. 14

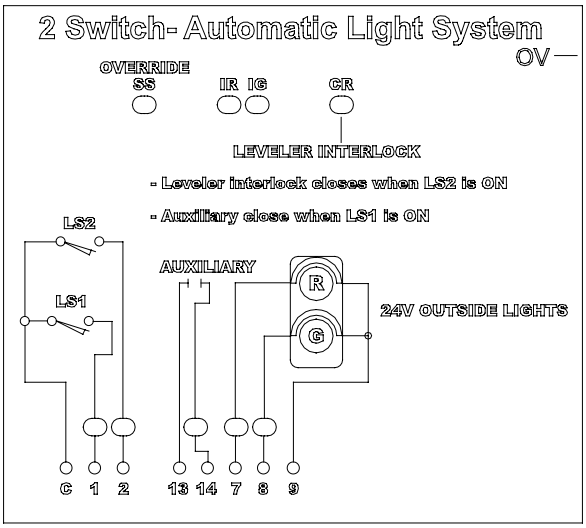

©2011 4Front Engineered Solutions, Inc.

OPERATION INSTRUCTIONS — ALS2, continued

Detailed Instructions

- When the leveler lip is positioned outside the lip keepers. (i.e. outside the storage position) LS1 closes and the LEDs for LS1 and Auxiliary go on.
- The inside light will change to solid Green and the outside light will remain flashing RED .
- Auxiliary terminals 13-14 are now closed.

4. Load/Unload vehicle.

5. Restore dock Leveler to the stored position.
   - When the leveler lip is positioned into the lip locks. (i.e. in the storage position) LS1 opens and the LEDs for LS1 and Auxiliary go off.
   - The inside light will change to solid Red and the outside light will continue to flash Red.
   - Auxiliary terminals 13-14 are now open.

6. Lower/Close Door.
   - When the door is no longer fully opened LS2 opens and the LEDs for LS2 and CR go off.
   - The inside light will stay solid Red and the outside light will change to flashing Green.
   - If the Leveler Interlock terminals 15-16 are interconnected to a Dock Leveler controller, dock leveler and leveler control circuit is now disabled.

7. Remove vehicle restraint or wheel chocks.

OPTION 2

LS2 = Door Closed Switch (625208) – LS2 closes when the dock door is not closed, inside lights continue to display solid Red, the outside lights switch to display flashing Red and the Interlock terminals 15-16 close.

LS1 = Door Open Switch (625208) – LS1 closes when the dock door is fully opened the inside lights change to display solid Green, the outside lights continue to flash Red and the Auxiliary terminals 13-14 close.

Fig. 15

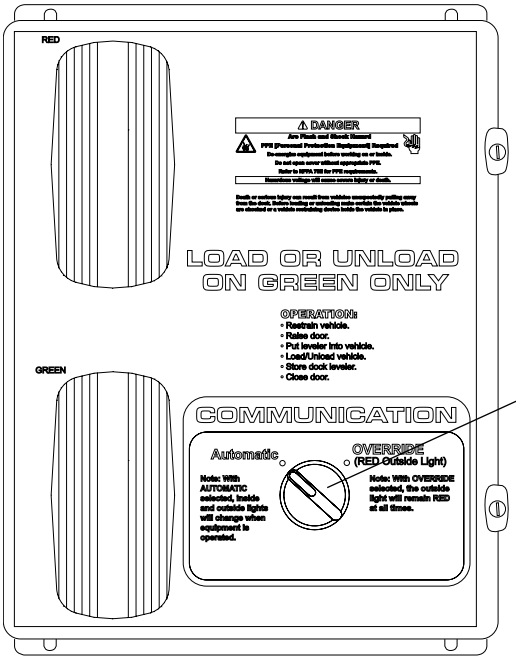

NOTE:

The selector switch “Override/(Red Outside Light)” position is only used to force the exterior lights Red when the Leveler is stored and/or when the door is closed. This is used as a signal to outside of the Dock that it is closed and not ready to accept vehicles or to restrain vehicles. The selector switch has no effect upon the interior Green Light. With option 1, the interior Green light will only be on; when the Leveler is positioned outside of the lip keepers, (either on the vehicle or in the end loading position) AND the door is open. With option 2, the interior Green light will only be on when the door is fully opened. When the inside light is Green the panels second set of auxiliary contacts are closed.

©2011 4Front Engineered Solutions, Inc.

1. Restrain vehicle (with vehicle restraint or wheel chocks).

⚠WARNING

Before loading or unloading make certain that the vehicle wheels are chocked or a vehicle restraining device holds the vehicle in place.

2. Raise/Open Door

   - As the door starts to open LS2 closes and the LEDs for LS2 and CR go on.
   - The inside light will remain solid Red and the outside light change to flashing RED.
   - Interlock terminals 15-16 close.
   - When the door is fully opened LS1 closes and the LEDs for LS1 and Auxiliary go on.
   - The inside light will change to solid Green and the outside light will remain flashing RED.
   - If the Auxiliary terminals 13-14 are interconnected to a Dock Leveler controller, dock leveler and leveler control circuit is now enabled.

3. Position Dock Leveler into vehicle.

4. Load/Unload vehicle.

5. Restore dock Leveler to the stored position.

6. Lower/Close Door.

   - As the door starts to close LS1 opens and the LEDs for LS1 and Auxiliary go off.
   - The inside light will change to solid Red and the outside light will continue to flash Red.
   - If the Auxiliary terminals 13-14 are interconnected to a Dock Leveler controller, dock leveler and leveler control circuit is now disabled.

7. Lower/Close Door.

   - As the door gets to the fully closed position LS2 opens and the LEDs for LS2 and CR go off.
   - The inside light will remain solid Red and the outside light change to flashing Green.
   - Interlock terminals 15-16 open.

8. Remove vehicle restraint or wheel chocks.

ALS2 LOGIC CHART

Switch Conditions	Inside RED "IR"	Inside GREEN "IG"	Outside RED	Outside GREEN	AUXILIARY 13-14	CR INTERLOCK 15-16
NOTHING ON	X			F		
LS1 On		X	F		X	
LS2 ON	X		F			X
LS1 & LS2 On		X	F		X	X
Selector Switch "SS" On	X		F			
SS & LS1 On		X	F		X	
SS & LS2 On	X		F			X
SS & LS1 & LS2 On		X	F		X	X

Logic Chart Legend: X = ON F= Flashing
IR = Inside Red light / IG= Inside Green Light / OR= Outside Red light / OG= Outside Green Light
Auxiliary Terminals 13 to 14. / Leveler Interlock Terminals 15 to 16
Option 1: LS1 = Door opened Limit Switch (625208) Closed when door is opened.
LS2 = Leveler Stored Limit Switch (6001225) Cloced when leveler is NOT stored.
Option 2: LS1 = Door opened Limit Switch (625208) Closed when door is opened.
LS2 = Door closed Limit Switch (625208) Closed when door is not closed.

©2011 4Front Engineered Solutions, Inc.

WIRING DIAGRAM — ALS2

ALS2 (SERCO P/N 629731; KELLEY P/N 6010115)

Fig. 16

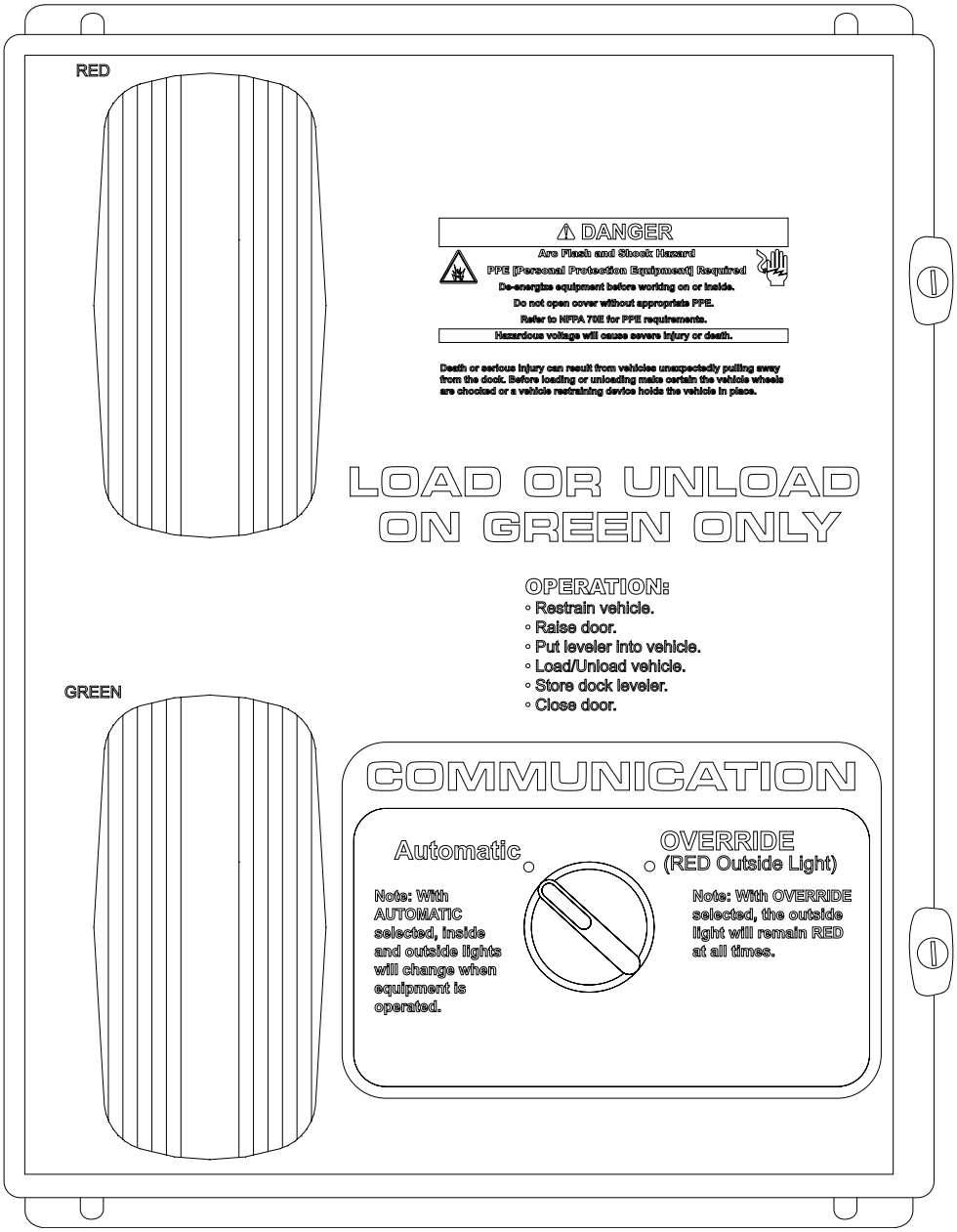

©2011 4Front Engineered Solutions, Inc.

ALS2 (SERCO P/N 629731; KELLEY P/N 6010115)

Fig. 17

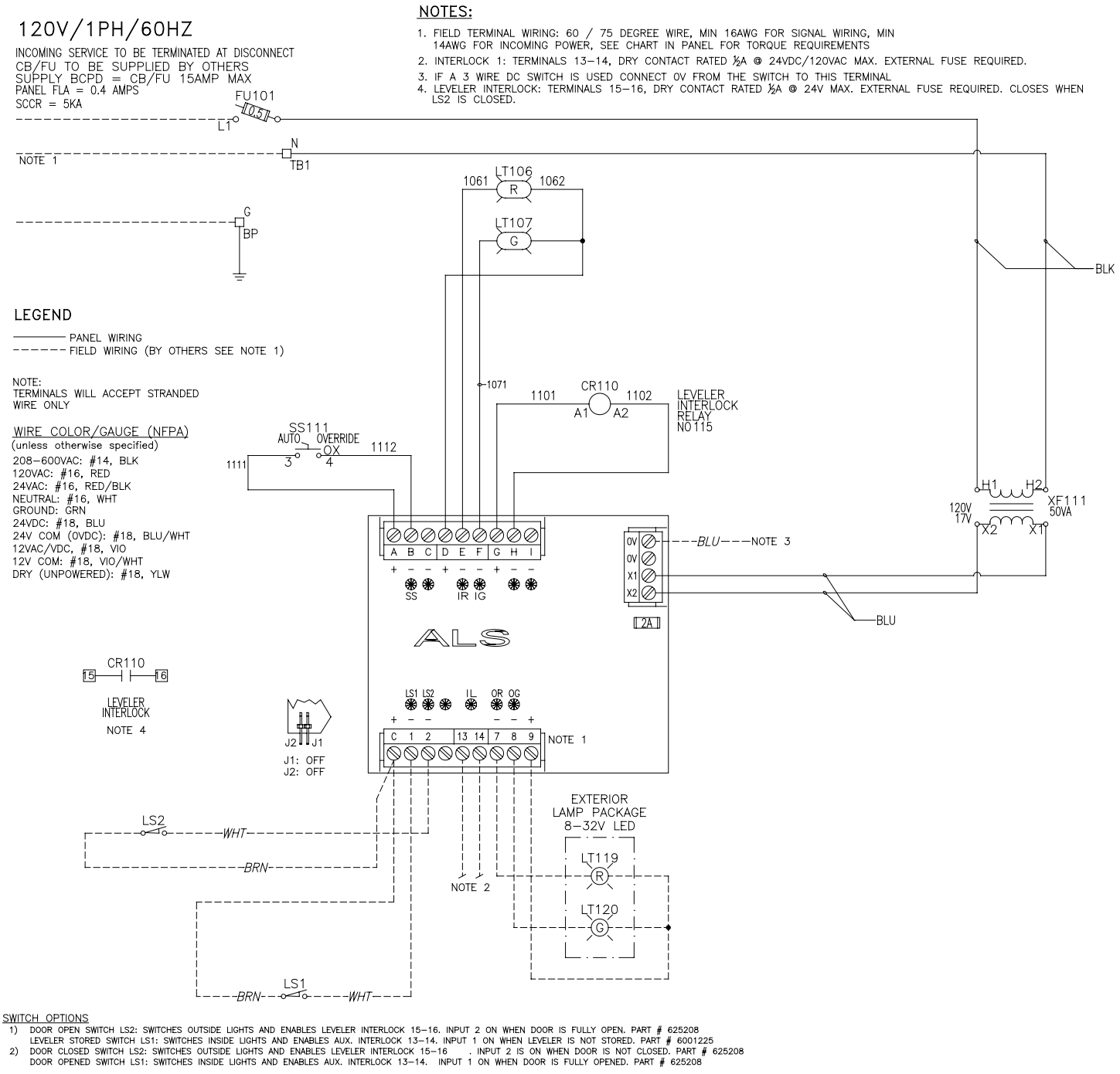

SWITCH OPTIONS

1) DOOR OPEN SWITCH LS2: SWITCHES OUTSIDE LIGHTS AND ENABLES LEVELER INTERLOCK 15–16. INPUT 2 ON WHEN DOOR IS FULLY OPEN. PART # 625208
   LEVELER STORED SWITCH LS1: SWITCHES INSIDE LIGHTS AND ENABLES AUX. INTERLOCK 13–14. INPUT 1 ON WHEN LEVELER IS NOT STORED. PART # 6001225
2) DOOR CLOSED SWITCH LS2: SWITCHES OUTSIDE LIGHTS AND ENABLES LEVELER INTERLOCK 15–16 . INPUT 2 IS ON WHEN DOOR IS NOT CLOSED. PART # 625208
   DOOR OPENED SWITCH LS1: SWITCHES INSIDE LIGHTS AND ENABLES AUX. INTERLOCK 13–14. INPUT 1 ON WHEN DOOR IS FULLY OPENED. PART # 625208

NOTE:

For 24V incoming power consult factory.

NOTE:

Power to control panel must be from fused disconnect supplied by others. All electrical work must meet all applicable codes. All devices shown in de-energized state.

©2011 4Front Engineered Solutions, Inc.

OPERATION INSTRUCTIONS — AMLS

Simplified Instructions

AMLS (SERCO P/N 629732; KELLEY P/N 6010116)

Fig. 18

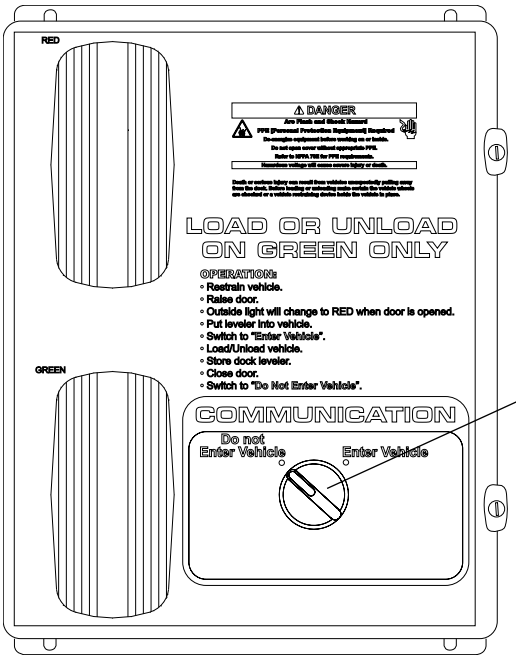

1. Restrain vehicle (with vehicle restraint or wheel chocks).

⚠WARNING

Before loading or unloading make certain that the vehicle wheels are chocked or a vehicle restraining device holds the vehicle in place.

2. Raise door.

   • The inside light will remain solid Red and the outside light will change to flashing Red when the door is opened.

   • Dock leveler motor is enabled.

3. Put dock leveler into vehicle.

⚠WARNING

Do not switch to "Enter Vehicle" unless wheels have been chocked or a vehicle restraining device holds the vehicle in place.

4. Turn selector switch to the “Enter Vehicle” position.

   • The inside light will change to solid Green.

5. Load/Unload vehicle.

6. Store dock leveler.

7. Close door.

8. Turn selector switch to the “Do Not Enter Vehicle” position.

   • The inside light will change to solid red and the outside light will change to flashing Green.

9. Remove vehicle restraint or wheel chocks.

NOTE:

The selector switch “Enter Vehicle” position can be used to force the exterior lights Red when the door is closed. This is used as a signal to outside of the Dock that it is closed and not ready to accept Vehicles.

Only when the door is opened is the dock leveler motor enabled. Turning the selector switch to the “Enter Vehicle” position does not enable the dock leveler.

©2011 4Front Engineered Solutions, Inc.

NOTE:

This control panel has only one approved control option. Any other installation or operation of this equipment must be reviewed and approved by the manufacturer.

INTRODUCTION

A single limit switch changes the outside light and enables a set of interlock contacts. Once the operator places the dock leveler into the trailer the selector switch (SS), is manually turned to the load truck position, changing the inside lights to green.

LIMIT SWITCH

LS1 = Door Opened Switch (625208) - When the dock door is fully opened, LS1 opens and the inside lights remain solid Red, the outside lights change to display flashing Red and the Interlock terminals 13-14 close.

1. Restrain vehicle (with vehicle restraint or wheel chocks).

⚠WARNING

Before loading or unloading make certain that the vehicle wheels are chocked or a vehicle restraining device holds the vehicle in place.

2. Raise/Open Door

   - When the door is fully opened, LS1 opens and the LED for LS1 goes off and the LED for Interlock goes on.
   - The inside light remains solid Red and the outside light changes to flashing RED.
   - If the Interlock terminals 13-14 are interconnected to a Dock Leveler controller, dock leveler and leveler control circuit is now enabled.

3. Position Dock Leveler into vehicle.

4. Turn Selector Switch “SS” to the “Enter Vehicle” position.

   - The “SS” LED goes on.
   - The inside light changes to Solid Green and the outside light remains flashing RED.

5. Load/Unload vehicle.

Fig. 19

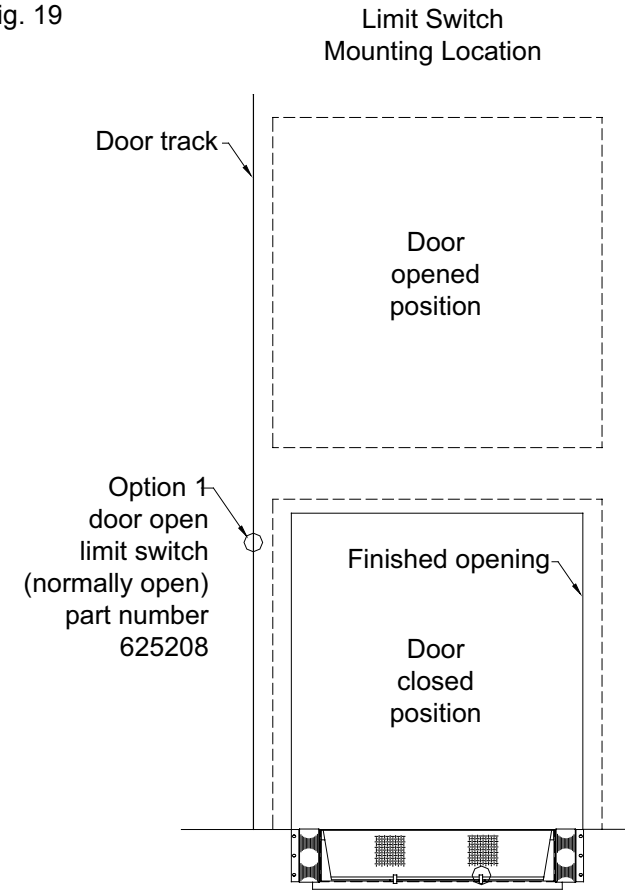

Fig. 20

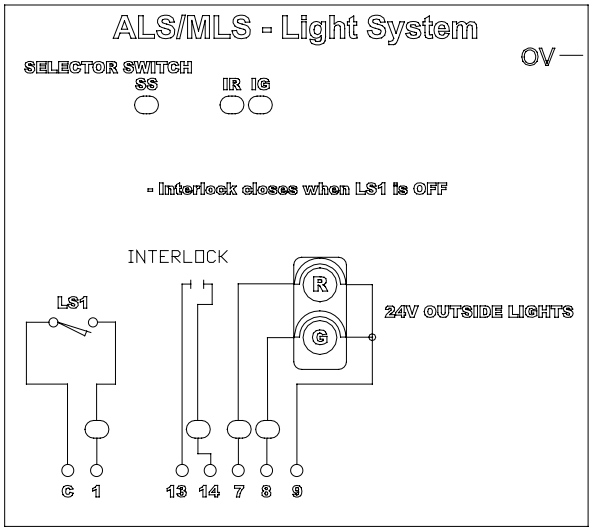

©2011 4Front Engineered Solutions, Inc.

6. Restore dock Leveler to the stored position.

7. Lower/Close Door.

   • When the door is not fully opened, LS1 closes, the LED for LS1 goes on and the LED for Interlock goes off.

   • If the Interlock terminals 13-14 are interconnected to a Dock Leveler controller, dock leveler and leveler control circuit is now disabled.

8. Turn Selector Switch “SS” to the “Do Not Enter Vehicle” position.

   • The “SS” LED goes off.

   • The inside light will change to solid Red and the outside light will change to flashing Green.

9. Remove vehicle restraint or wheel chocks.

AMLS LOGIC CHART

Switch Conditions	**Inside RED “IR”**	**Inside GREEN “IG”**	**Outside RED**	**Outside GREEN**	**INTERLOCK** 13-14
NOTHING ON	X		F		X
LS1 ON Only	X			F	
SS ON Only		X	F		X
SS & LS1 ON		X	F		

LS1 = Door opened Limit Switch (625208) Closed when door is open

Logic Chart Legend: X = ON F= Flashing

©2011 4Front Engineered Solutions, Inc.

AMLS (SERCO P/N 629732; KELLEY P/N 6010116)

Fig. 21

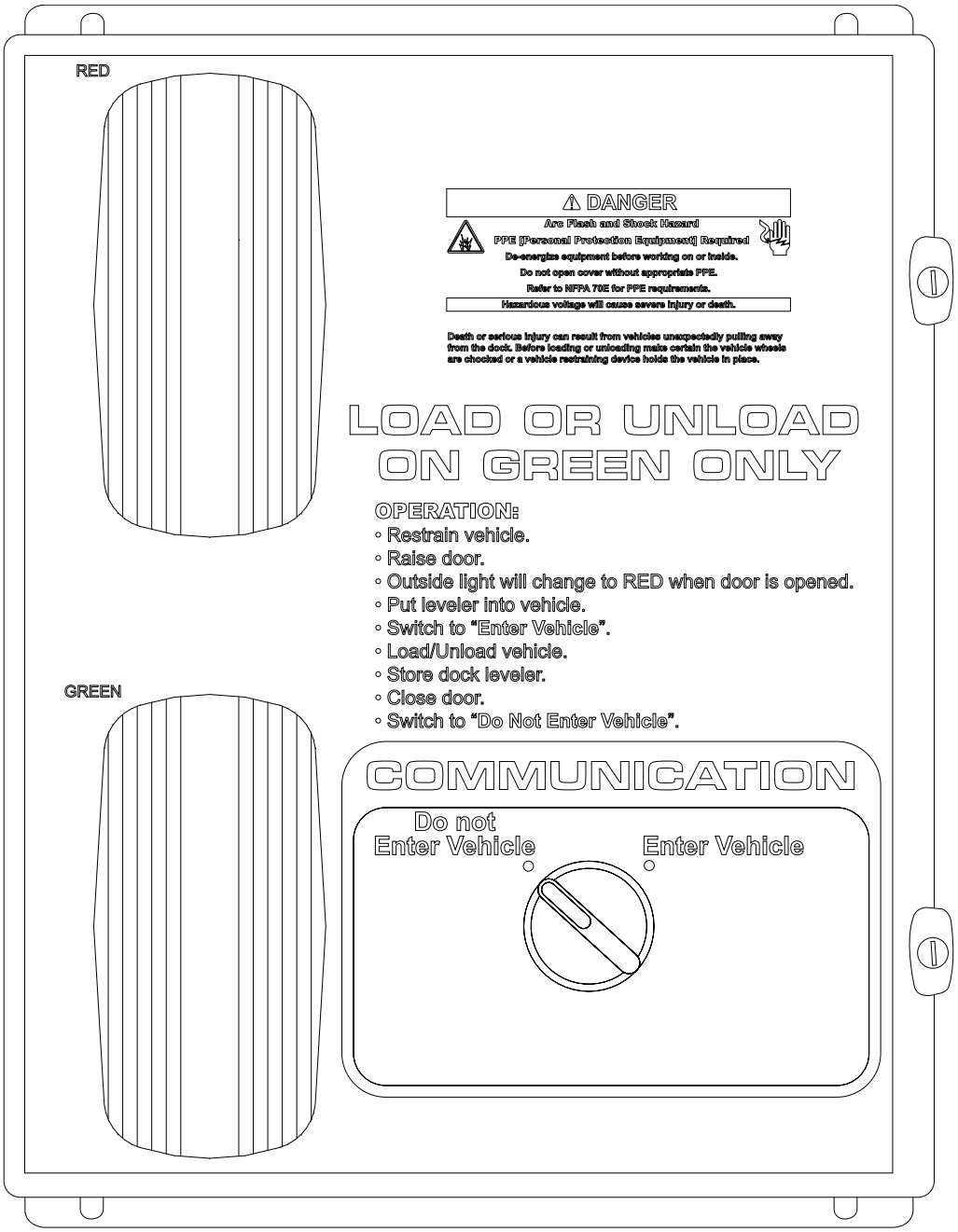

©2011 4Front Engineered Solutions, Inc.

WIRING DIAGRAM — AMLS, continued

AMLS (SERCO P/N 629732; KELLEY P/N 6010116)

Fig. 22

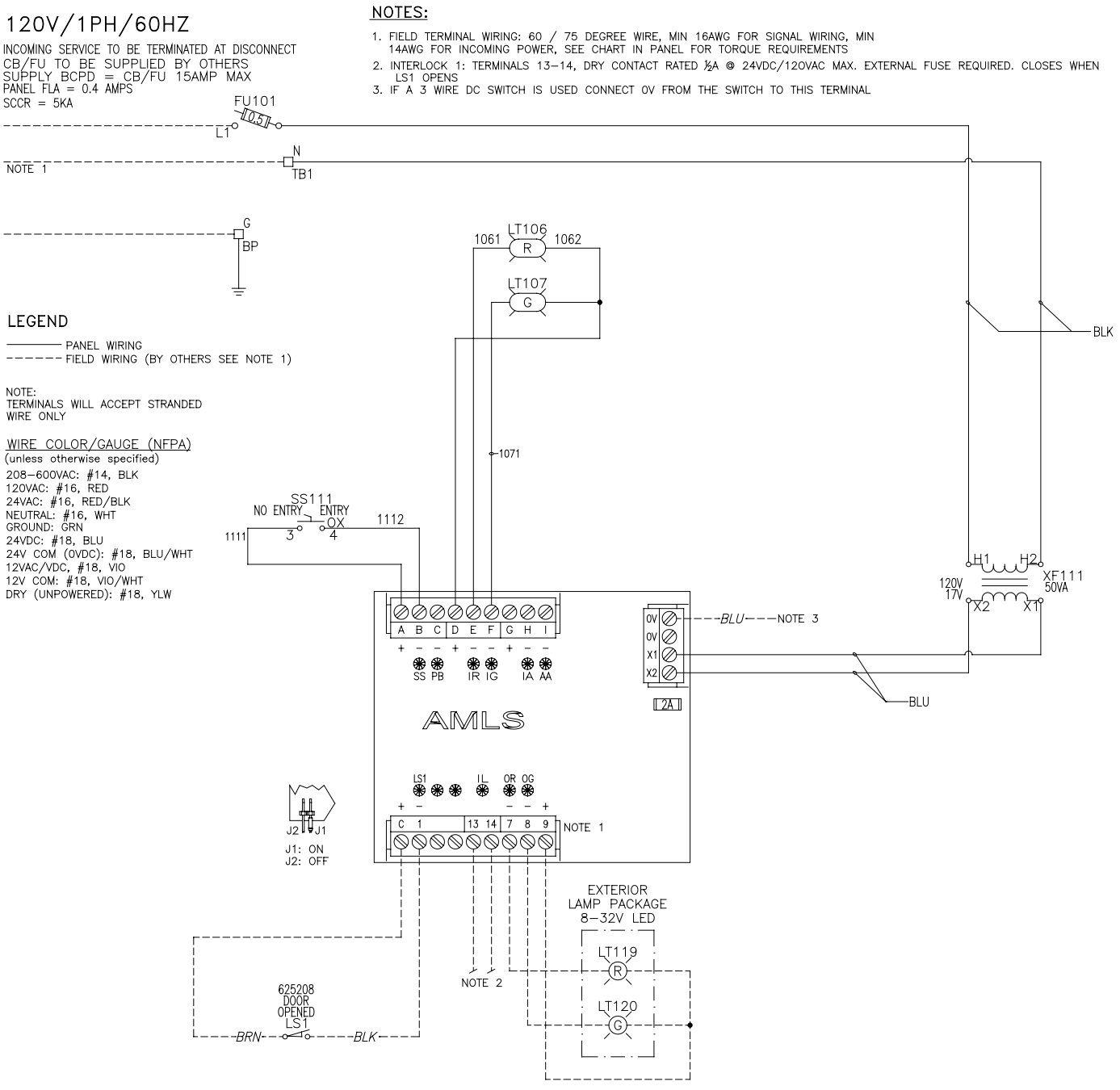

NOTE:

For 24V incoming power consult factory.

NOTE:

Power to control panel must be from fused disconnect supplied by others. All electrical work must meet all applicable codes. All devices shown in de-energized state.

©2011 4Front Engineered Solutions, Inc.

MLS (SERCO P/N 6006577; KELLEY P/N 6010117)

Fig. 23

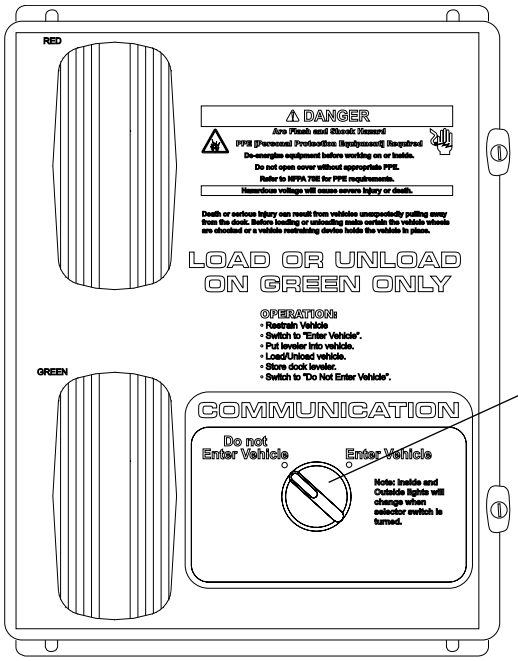

1. Restrain Vehicle (with vehicle restraint or manual wheel chocks).

⚠WARNING

Before loading or unloading make certain that the vehicle wheels are chocked or a vehicle restraining device holds the vehicle in place.

Do not switch to "Enter Vehicle" unless wheels have been chocked or a vehicle restraining device holds the vehicle in place.

2. Turn selector switch to the “Enter Vehicle” position.
   - Inside light will change to solid Green.
   - Outside light will change to flashing Red.
   - Aux. interlock contacts close.
3. Put leveler into vehicle.
4. Load/Unload Vehicle.
5. Store dock leveler.
6. Turn selector switch to the “Do Not Enter Vehicle” position.
   - Inside light will change to solid Red.
   - Outside light will change to flashing Green.
   - Dock leveler motor is now disabled.
7. Release vehicle (with vehicle restraint or manual wheel chock).

©2011 4Front Engineered Solutions, Inc.

OPERATION INSTRUCTIONS — MLS, continued

Detailed Instructions

MLS (SERCO P/N 6006577; KELLEY P/N 6010117)

NOTE:

This control panel has only one approved control option. Any other installation or operation of this equipment must be reviewed and approved by the manufacturer.

INTRODUCTION

There are no limit switches. When the panel face mounted selector switch is in the “Do Not Enter Vehicle” position the outside lights display flashing Green and the inside lights display red. When the operator turns the selector switch to the “Enter Vehicle” position the outside lights change to display flashing Red and the inside lights display Green. The Interlock contacts are closed when the selector switch is in the “Enter Vehicle” position.

1. Restrain vehicle (with vehicle restraint or wheel chocks).

⚠WARNING

Before loading or unloading make certain that the vehicle wheels are chocked or a vehicle restraining device holds the vehicle in place.

2. Turn Selector Switch “SS” to the “Enter Vehicle” position.

   • The “SS” LED goes on.

   • The inside light changes to Solid Green and the outside light change to flashing RED.

   • If the Interlock terminals 13-14 are interconnected to a Dock Leveler controller, dock leveler and leveler control circuit is now enabled.

3. Position Dock Leveler into vehicle.

Fig. 24

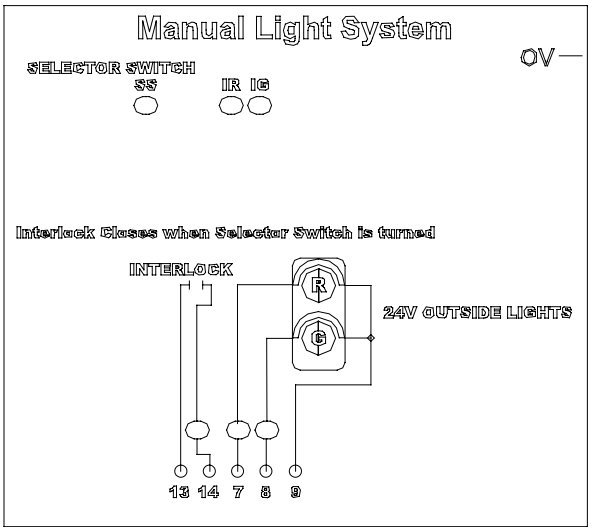

4. Load/Unload vehicle.

5. Restore dock Leveler to the stored position.

6. Turn Selector Switch “SS” to the “Do Not Enter Vehicle” position.

   • The “SS” LED goes off.

   • The inside light will change to solid Red and the outside light will change to flashing Green.

   • If the Interlock terminals 13-14 are interconnected to a Dock Leveler controller, dock leveler and leveler control circuit is now disabled.

7. Remove vehicle restraint or wheel chocks.

MLS LOGIC CHART

Switch Conditions	Inside RED “IR”	Inside GREEN “IG”	Outside RED	Outside GREEN	INTERLOCK 13-14
NOTHING ON	X			F	
SS ON		X	F		X

Logic Chart Legend: X = ON F= Flashing

©2011 4Front Engineered Solutions, Inc.

MLS (SERCO P/N 6006577; KELLEY P/N 6010117)

Fig. 25

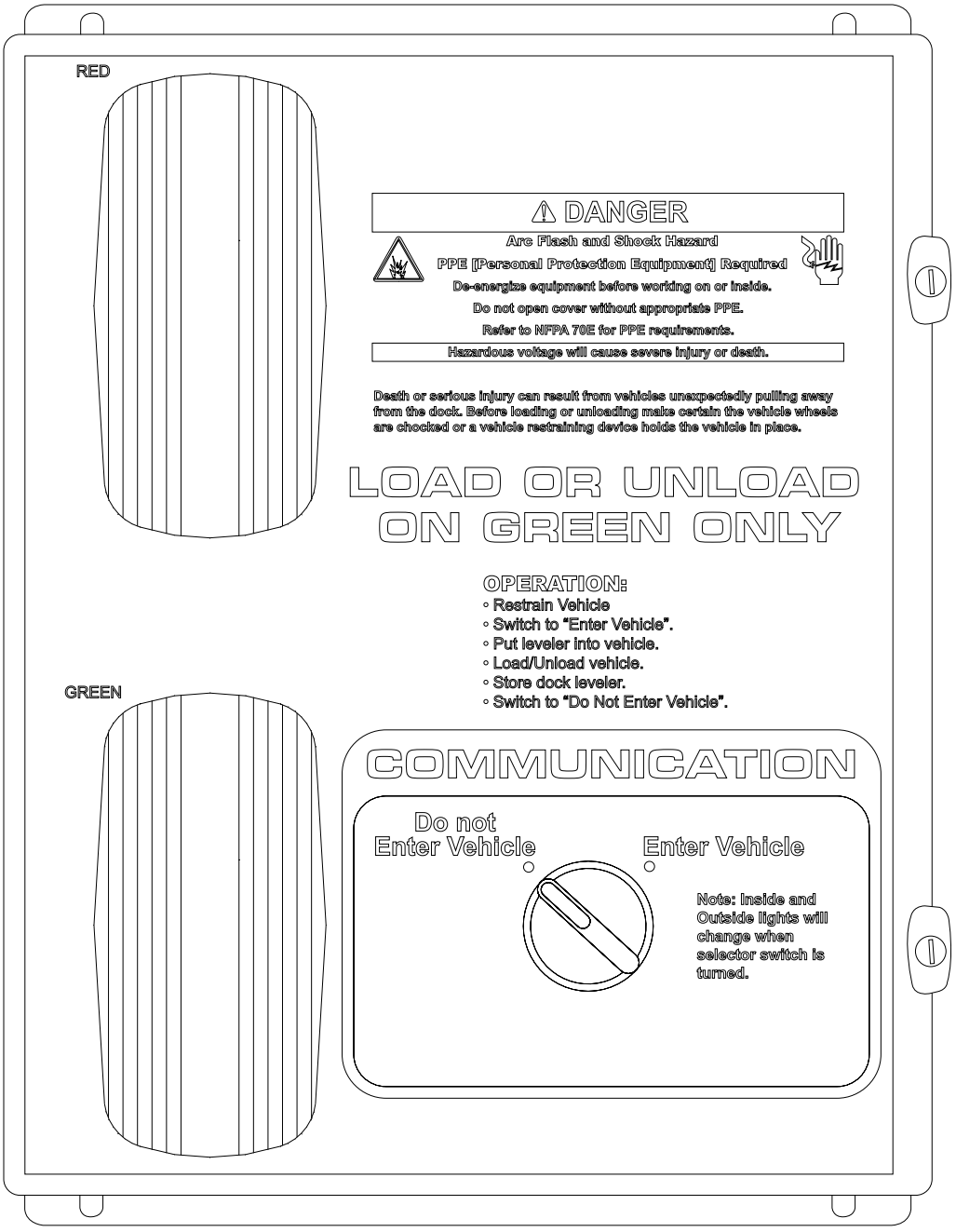

©2011 4Front Engineered Solutions, Inc.

WIRING DIAGRAM — MLS, continued

MLS (SERCO P/N 6006577; KELLEY P/N 6010117)

Fig. 26

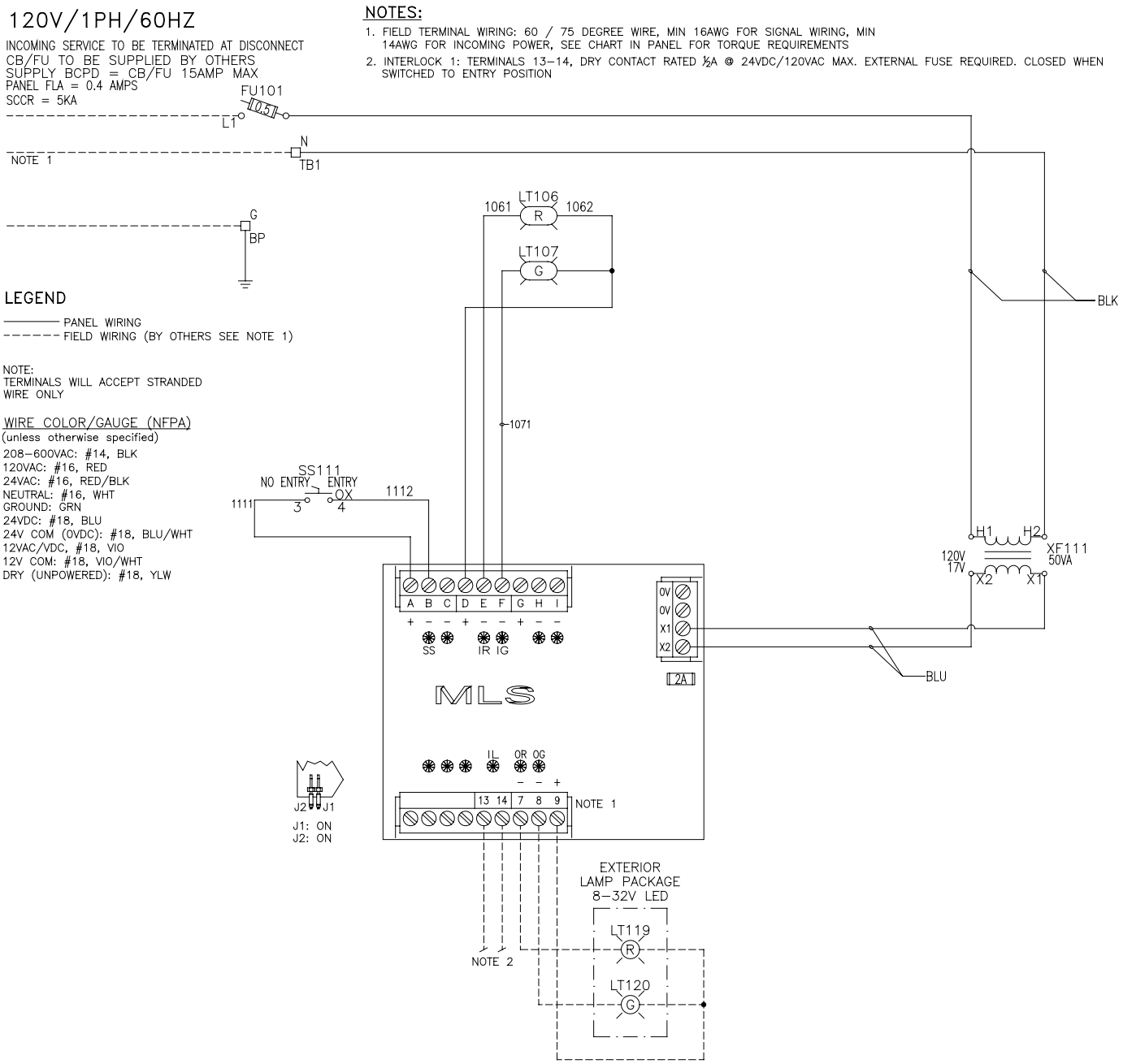

NOTE:

For 24V incoming power consult factory.

NOTE:

Power to control panel must be from fused disconnect supplied by others. All electrical work must meet all applicable codes. All devices shown in de-energized state.

©2011 4Front Engineered Solutions, Inc.

⚠WARNING

To ensure proper function, durability and safety of the product, only replacement parts that do not interfere with the safe, normal operation of the product must be used. Incorporation of replacement parts or modifications that weaken the structural integrity of the product, or in any way alter the product from its normal working condition at the time of purchase from 4Front Engineered Solutions, Inc. may result in product malfunction, breakdown, premature wear, death or serious injury.

Fig. 27

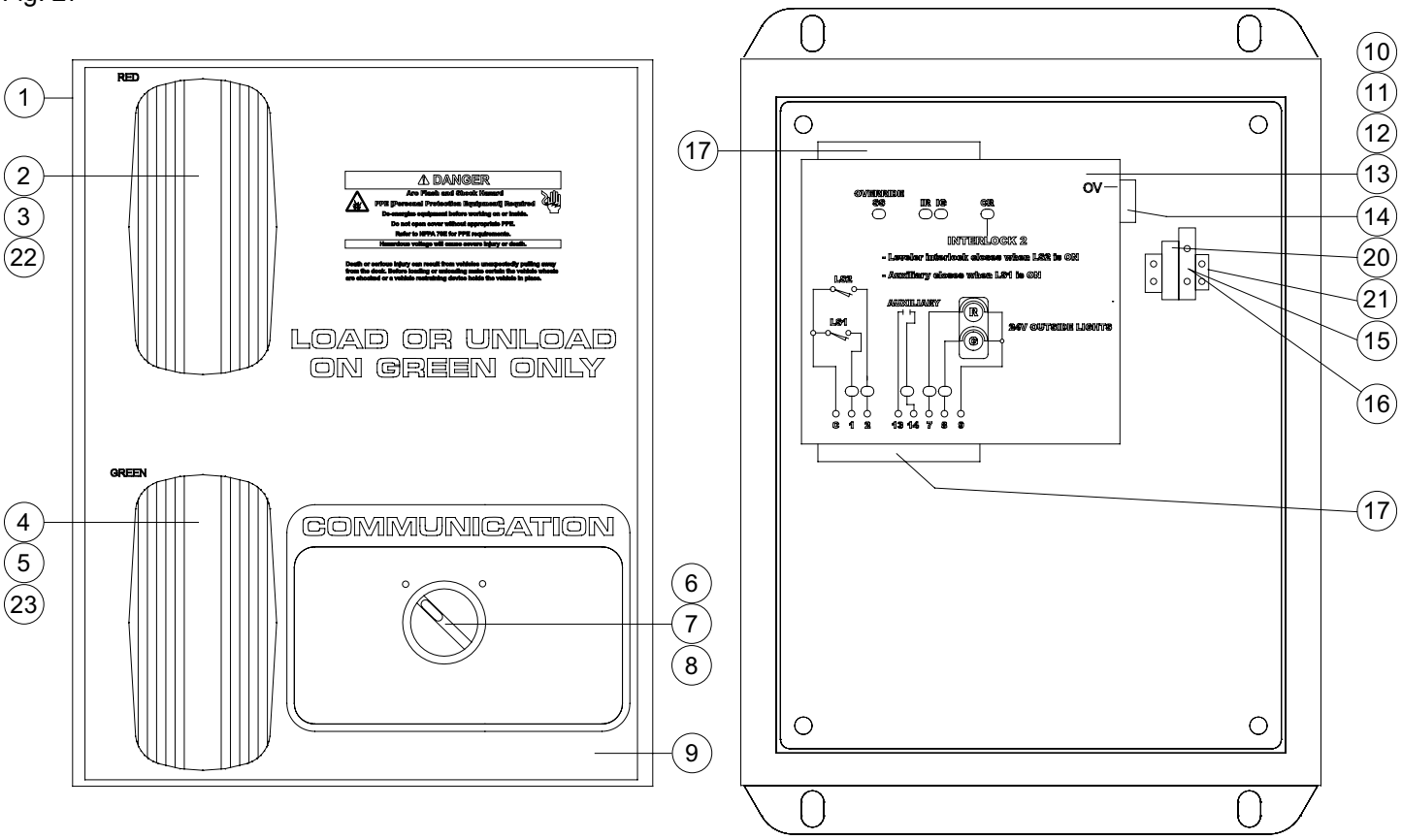

©2011 4Front Engineered Solutions, Inc.

PARTS LIST, continued

Item	Quantity	Description	Part Number
1	1	ENCLOSURE	6009171
2	1	RECTANGLE BASE - RED	823107
3	1	LRU REGULATED CURRENT- RED (10 TO 28V AC/DC)	6006375
4	1	OVAL BASE - GREEN	823111
5	1	LRU REGULATED CURRENT- GREEN (10 TO 28V AC/DC)	6006377
6	1	2 POS. SEL. SWITCH - MAIN.	632217
7	1	SELECTOR SWITCH BASE	6000515
8	1	1 N/O CONTACT	632228
9	1	PANEL FACE LABEL - FOR 629730 PANEL ONLY — SERCO PANEL FACE LABEL - FOR 629731 PANEL ONLY — SERCO PANEL FACE LABEL - FOR 629732 PANEL ONLY — SERCO PANEL FACE LABEL - FOR 6006577 PANEL ONLY — SERCO PANEL FACE LABEL - FOR 6010114 PANEL ONLY — KELLEY PANEL FACE LABEL - FOR 6010115 PANEL ONLY — KELLEY PANEL FACE LABEL - FOR 6010116 PANEL ONLY — KELLEY PANEL FACE LABEL - FOR 6010117 PANEL ONLY — KELLEY	6006619 6006619 6006627 6006629 6009497 6009497 6009499 6009500
10	1	BOARD COVER PLATE - 629730 AND 6010114 BOARD COVER PLATE - 629731 AND 6010115 BOARD COVER PLATE - 629732 AND 6010116 BOARD COVER PLATE - 6006577 AND 6010117	6010443 6010444 6010456 6010442
11	1	PRINTED CIRCUIT BOARD (SEE SCHEMATIC FOR JUMPER SETTINGS)	6010512
12	1	FUSE 2A - TYPE MDL2A (ON CIRCUIT BOARD)	MDL2A
13	1	TRANSFORMER 120/17V 56VA	6008636
14	1	4 PIN CONNECTOR	6008822
15	1	TERMINAL FUSED	6000538
16	1	FUSE 0.5A - TYPE MDL0.5A (FUSE TERMINAL BLOCK)	MDL0.5A
17	1	9 PIN CONNECTOR	6008823
18	1	CONTROL RELAY BASE - 629731 AND 6010115 ONLY (not shown)	6000522
19	1	CONTROL RELAY 24VDC COIL - 629731 AND 6010115 ONLY (not shown)	6000520
20	1	TERMINAL, 2 CONDUCTOR	6000542
21	2	ENDSTOP, SCREWLESS	6000549
22	1	RED LENS	823100
23	1	GREEN LENS	AP0027

©2011 4Front Engineered Solutions, Inc.

PARTS LIST — EXTERIOR SIGN AND LIGHTS

Fig. 28

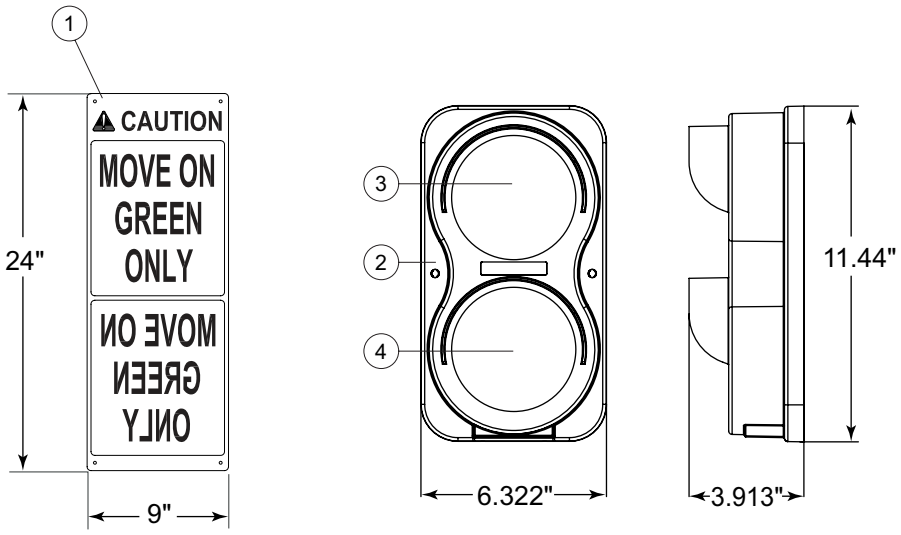

Item	Quantity	Part Description	Part Number
1	1	Outside Sign – Normal and Reverse Lettering	709-832
2	1	Light Assembly - Complete (LEDs)	6007798
3*	1	Red LED Light Assy.	6007800
4*	1	Green LED Light Assy.	6007801

**** Part of Item 2 (Light Assembly – Complete).***

©2011 4Front Engineered Solutions, Inc.

NOTES

©2011 4Front Engineered Solutions, Inc.

NOTES

©2011 4Front Engineered Solutions, Inc.

NOTES

©2011 4Front Engineered Solutions, Inc.

LIMITED WARRANTY

4FRONT ENGINEERED SOLUTIONS, INC. warrants that this LIGHT SYSTEM will be free from defects in material and workmanship under normal use for a period of one (1) year from the earlier of 1) 60 days after the date of initial shipment by 4FRONT ENGINEERED SOLUTIONS, INC., or 2) the date of installation of the LIGHT SYSTEM by the original purchaser, provided that the owner maintains and operates the LIGHT SYSTEM in accordance with this Owner's Manual. In the event that this LIGHT SYSTEM proves defective in material or workmanship within the applicable limited warranty period, 4FRONT ENGINEERED SOLUTIONS, INC. will, at its option:

1. Replace the LIGHT SYSTEM, or the defective portion of either, without charge to the owner (excluding any cost of removal or reinstallation which shall be the sole responsibility of the purchaser); or

2. Alter or repair the LIGHT SYSTEM, on site or elsewhere, without charge to the owner.

The limited warranty stated in the preceding paragraph IS EXCLUSIVE AND IT IS IN LIEU OF ANY OTHER GUARANTEES AND WARRANTIES, EXPRESS OR IMPLIED. The limited warranty does not cover any failure caused by improper installation, abuse, negligence, or failure to maintain and adjust the LIGHT SYSTEM properly. Parts requiring replacement due to damage resulting from vehicle impact, abuse, or improper operation are not covered by this warranty. 4FRONT ENGINEERED SOLUTIONS, INC. disclaims any responsibility or liability for any loss or damage (including, without limitation, direct, indirect or consequential damages, or lost profits or production time) that results from the use of unauthorized replacement parts or modification of the LIGHT SYSTEM. 4FRONT ENGINEERED SOLUTIONS, INC. sole obligation with regard to a LIGHT SYSTEM that proves to be defective in material or workmanship shall be as set forth in its standard warranty above (i.e., 4FRONT ENGINEERED SOLUTIONS, INC. will, at its option, repair or replace the LIGHT SYSTEM or portion thereof, without charge to the purchaser.).

This limited warranty does not cover any failure caused by improper installation, abuse, negligence, or failure to properly maintain and adjust the LIGHT SYSTEM. This limited warranty will be void or of no effect if the original purchaser does not notify 4FRONT ENGINEERED SOLUTIONS, INC. warranty department within ninety (90) days after the product defect is discovered. Parts requiring replacement due to damage resulting from vehicle impact, abuse, or improper operation are not covered by this warranty. 4FRONT ENGINEERED SOLUTIONS, INC. disclaims any responsibility or liability for any loss or damage that results from the use of unauthorized replacement parts or modification of the LIGHT SYSTEM.

THERE ARE NO WARRANTIES, EXPRESS OR IMPLIED, WHICH EXTEND BEYOND THE DESCRIPTION ON THE FACE HEREOF, AND THERE IS NO WARRANTY OF MERCHANTABILITY OR OF FITNESS FOR A PARTICULAR PURPOSE.

4FRONT ENGINEERED SOLUTIONS, INC. **warranties extend only to the LIGHT SYSTEM itself.**

4FRONT ENGINEERED SOLUTIONS, INC. **DISCLAIMS all warranties, express or implied, responsibility or liability for loss or damage of any kind associated with the installation or maintenance of the LIGHT SYSTEM, including any liability for premature product wear, product failure, property damage or bodily injury arising from improper installation or maintenance of the LIGHT SYSTEM.**

For Solar See 6009418.

©2011 4Front Engineered Solutions, Inc.

Please direct questions about your light system to your local distributor.

Your local distributor is:

Corporate Head Office:

1612 Hutton Dr. Suite 140
Carrollton, TX. 75006
Tel. (972) 466-0707
Fax (972) 323-2661

©2011 4Front Engineered Solutions, Inc.

Part No. 6005099B