GWL-2300®
Vehicle Restraint

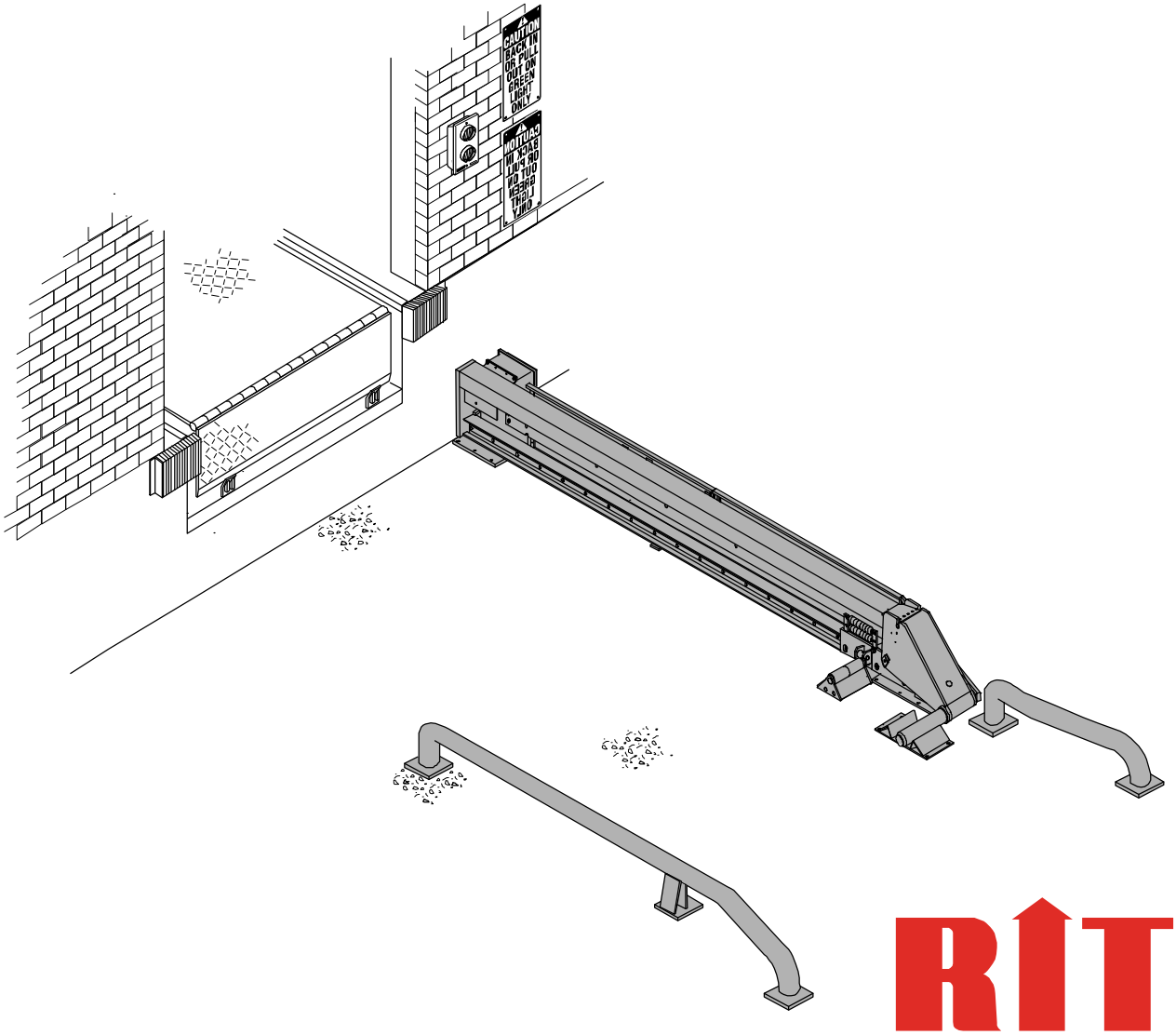

SERIAL NO. GW231001 & UP

Owner's Manual

Printed in U.S.A. by RITE-HITE® Print Shop
Publication No. 1177
Febuary 2003
Copyright 2003 RITE-HITE®

TABLE OF CONTENTS

INTRODUCTION 2
SAFETY WARNINGS 3
OWNER RESPONSIBILITY 4
DEFINITION AND FUNCTION. 5
FEATURES 6
INSTALLATION INSTRUCTIONS. 8
WIRING DIAGRAM 14
ELECTRICAL SCHEMATIC 15
OPERATING PROCEDURES & TESTING 18
MAINTENANCE (BASED ON TYPICAL APPLICATIONS OF 8 TRUCKS PER DAY). 23
TROUBLESHOOTING 25
HORN OVERRIDE CODE AND DIAGNOSTICS 28
REPLACEMENT PARTS 30

INTRODUCTION

Read and understand this manual before attempting to install or operate. For best results, have this product serviced by your authorized RITE-HITE® representative.

The GWL-2300 vehicle restraint by RITE-HITE is intended to provide a safer workplace for workers in shipping and receiving dock areas. The GWL-2300 vehicle restraint is a restraint device that, when properly installed and operated, retains a secure connection between the truck and dock. Signal lights, warning horn and signs provide instructions to the truck driver and GWL-2300 vehicle restraint operator that a safe condition exists. The GWL-2300 vehicle restraint is operated by pressing push buttons on an inside control box.

NOTICE TO USER

Your local RITE-HITE® representative provides a Planned Maintenance Program (P.M.P.) which can be fitted to your specific operation. Call your local representative or the RITE-HITE® Corporation at 414-355-2600.

The RITE-HITE® products in this manual are covered by one or more of the following U.S. patents: 4,531,248; 4,560,315 (RE: 32,968); 4,570,277; 4,605,353 (RE: 33,154); 4,634,334; 4,692,755; 4,744,121; 4,819,770; 4,843,373; 4,865,507; 4,920,598; 4,995,130; 5,040,258; 5,111,546; 5,212,846; 5,271,183; 5,299,386; 5,311,628; 5,323,503; 5,375,965; 5,440,772; 5,442,825; 5,453,735; 5,531,557; 5,546,623; 5,553,987; 5,582,498; 5,664,930; 5,702,223; 5,762,459 (RE: 37,570); 5,882,167; 5,964,572; 6,010,297; 6,065,172; 6,070,283; 6,074,157; 6,085,375; 6,092,970; 6,106,212; 6,116,839; 6,190,109; 6,220,809; 6,627,016; 6,238,163; 6,322,310; 6,311,352; 6,360,394; 6,368,043, 6,431,819; and pending U.S. and foreign patent applications. RITE-HITE®, LEVEL-RITE™, GUARDRITE® , SAFE-T-LIP® , HYDRACHEK® , WHEEL-LOK™ , DOK-LOK® , DUAL-DOK® , and SAFE-T-GATE® are trademarks of RITE-HITE® Corporation.

SAFETY WARNING

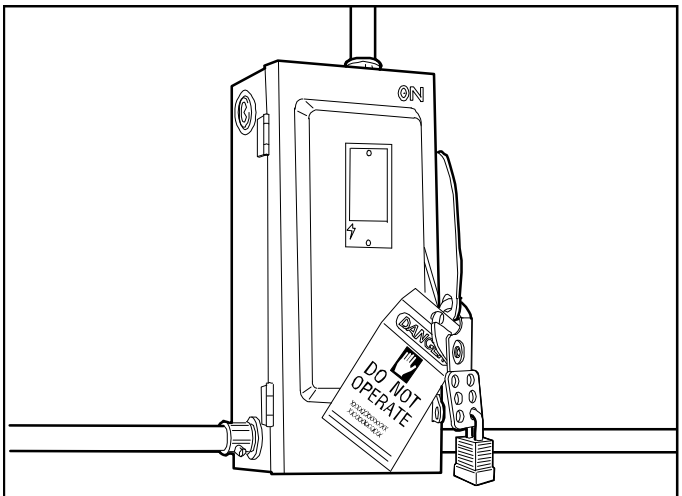

Figure 1 - LOCKOUT/TAGOUT

WARNING

When working with electrical or electronic controls, make sure that the power source has been locked out and tagged out according to OSHA regulations and approved local electrical codes.

LOCKOUT/TAGOUT PROCEDURES

The Occupational Safety and Health Administration (OSHA) requires, in addition to posting safety warnings and barricading the work area (including, but not limited to, trucking office and loading docks), that the power supply has been locked in the OFF position or disconnected. It is mandatory that an approved lockout device is utilized. An example of a lockout device is illustrated. The proper lockout procedure requires that the person responsible for the repairs is the only person who has the ability to remove the lockout device.

In addition to the lockout device, it is also a requirement to tag the power control in a manner that will clearly note that repairs are under way and state who is responsible for the lockout condition. Tagout devices have to be constructed and printed so that exposure to weather conditions, or wet and damp locations, will not cause the tag to deteriorate or become unreadable.

RITE-HITE® does not recommend any particular lockout device, but recommends the utilization of an OSHA approved device (refer to OSHA regulation 1910.147). RITE-HITE® also recommends the review and implementation of an entire safety program for the Control of Hazardous Energy (Lockout/Tagout). These regulations are available through OSHA publication 3120.

DANGER

This is the highest level statement. Failure to follow the listed instructions will most likely result in severe injury or death.

CAUTION

The statements used with this level of warning deal with a safe operating procedure. If the procedure is ignored, the possibility of personal injury may exist.

WARNING

This is a statement of serious hazard. Failure to follow the listed instructions could place the individual at risk of serious injury or death.

IMPORTANT

IMPORTANT is used to draw attention to a procedure that needs to be followed to prevent machine damage.

OWNER RESPONIBILITY

1. The owner should recognize the inherent danger of the interface between dock and transport vehicle. The owner should, therefore, train and instruct operators in the safe use of dock equipment in accordance with the information provided below. The manufacturer shall publish, provide to the initial purchaser, and make the following information readily available to owners:
   - Installation instructions
   - Recommended initial and periodic inspections procedures
   - Maintenance procedures
   - Operating instructions
   - Descriptions or specifications for replaceable or repairable parts
   - Tables identifying the grade (slope) for all variations of length or configuration of the dock equipment, and
   - Information identifying the maximum uncontrolled drop encountered upon sudden removal of support while within the working range of the equipment.

   It shall be the responsibility of the owner to verify that the material listed in this section has been received and that it is made available for the instruction and training of presonnel entrusted with the use or maintenance of the dock equipment.
2. When a transport vehicle is parked at a loading dock, it is important that the vehicle is relatively perpendicular to the dock face and in close contact with at least one of the dock bumpers.
3. Nameplates, cautions, instructions, and posted warnings shall not be obscured from the view of operating or maintenance personnel for whom such warnings are intended.
4. Manufacturer's recommended periodic maintenance and inspection procedures in effect at date of shipment shall be followed, and written records of the performance of these procedures should be kept.
5. As with any piece of machinery, dock equipment requires routine maintenance, lubrication, and adjustments. Your local RITE-HITE® representative offers owners the option of a Planned Maintenance Program (P.M.P.). As part of this service, your local RITE-HITE® representative will do all routine maintenance, lubrication, and adjustments.
6. Dock equipment that is structurally damaged shall be removed from service, inspected by a manufacturer's authorized representative, and repaired as needed before being placed back in service.
7. The manufacturer shall make available replacement nameplates, caution/instruction labels, and operating/maintenance manuals upon request of the owner. The owner shall see that all nameplates, caution/instruction markings or labels are in place and legible, and that the appropriate operating/maintenance manuals are provided to users.
8. Modifications or alterations of dock equipment shall be made only with written permission of the original manufacturer. These changes shall also satisfy all safety recommendations of the original equipment manufacturer for the particular application of the dock equipment.
9. When industrial trucks are driven on and off transport vehicles during the loading and unloading operation, the brakes on the transport vehicle shall be applied and wheel chocks or a positive restrainting device shall be engaged.
10. In selecting dock equipment, it is important to consider not only present requirements but also future plans or adverse environments.

DEFINITION AND FUNCTION

The GWL-2300 vehicle restraint is a truck and trailer locking system used to help secure trucks and trailers to the face of a loading dock. The engagement mechanism is positioned by the trailer as it approaches the loading dock. The locking arm assembly, which blocks the rear wheel of the truck or trailer, can then be engaged by pressing the LOCK push button.

This prevents forward movement of the truck/trailer that may create an unsafe void between the face of the dock and the rear end of the truck/trailer as the forklift travels from the loading dock onto the trailer; and creates an obstruction noticeable (via outside lights) to the truck driver, should the driver accidentally try to pull the truck/ trailer away while it is being serviced.

NOTE
There is no need to hold button to maintain its function. Once a button is depressed, the GWL-2300 vehicle restraint will lock or unlock for a preset time interval.

The normal mode of the restraint is the locking arm assembly stored at the far end (away from the dock) with the barrier arm on the approach. Inside lights should be flashing red and outside lights should be flashing green.

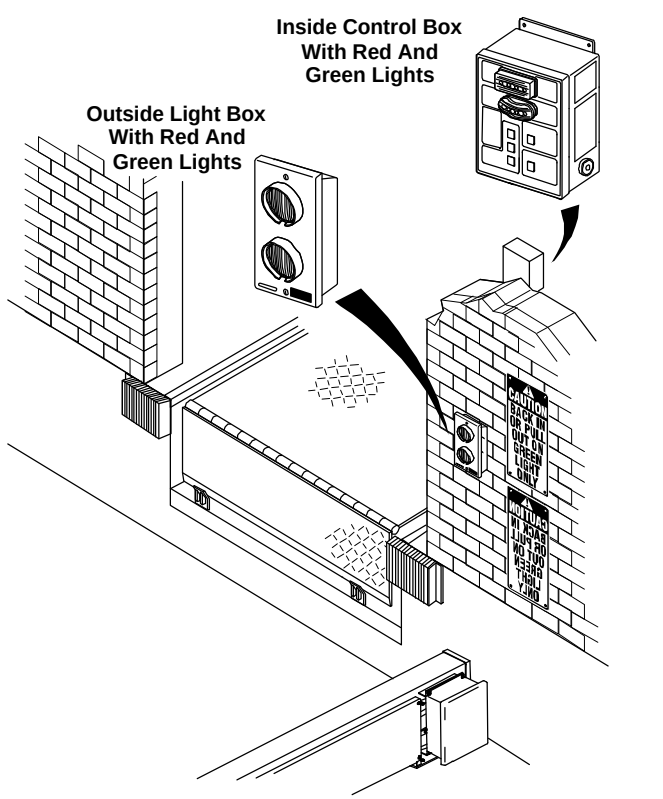

FIGURE 2 - VISUAL CONTROLS

The proper activation of the barrier and the locking mechanism is monitored by:

Visual Controls – one set of flashing green and red lights located inside the building for the dock personnel, and one set located outside the building for the truck driver. See Figure 2.

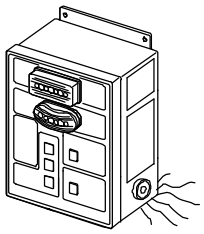

FIGURE 3 - AUDIO CONTROLS

Audio Controls – a horn sounds inside the building, warning dock personnel when the locking mechanism is not properly activated. In this case, the truck or trailer must be secured by other means (wheel chocks etc.) prior to servicing the trailer. See Figure 3.

FEATURES

See Figure 4 for locations of these features.

HYDRAULIC CYLINDER
Moves the Lifting Rails back and forth, thus raising or lowering the locking pawl into place.

POWER UNIT ENCLOSURE
Houses the 120 VAC Hydrualic Power Unit and terminal block assembly.

BARRIER SHAFT
The shaft which serves as the restraining obstruction in front of the rearmost tire. It is connected to the locking arm assembly.

BARRIER RAMP
The assembly that the barrier shaft stores in. Barrier ramp is used to protect the barrier shaft when a truck/trailer backs into place.

FRAME ASSEMBLY
The main weldment which is bolted onto the approach. It acts as a guide/rail for the locking arm assembly, trigger trolley, and lock trolley.

LOCKING ARM ASSEMBLY
The assembly which is rotated up into its UP position when a trailer backs into the dock.

LOCKING ARM TROLLEY ASSEMBLY
Locking arm trolley assembly holds the locking arm assembly to the frame and houses the pawl assembly.

LIFTING RAILS
The component which is pushed by the hydraulic cylinder. It rides upon diagonal slotted plates along the frame. The vertical motion drives the locking pawl into the ratchet.

PAWL ASSEMBLY
Assembly which is driven upward into the ratchet by the Lifting Rails when the unit is locked.

TRIGGER ASSEMBLY
Component which is contacted by the rearmost tire of a trailer. When a tire engages the trigger, it will pull the locking arm assembly into its UP position, and pull the locking arm assembly along the frame assembly.

TRIGGER TROLLEY ASSEMBLY
The trigger trolley assembly holds the trigger assembly to the frame.

EXTENSION SPRINGS
The extension springs connect the locking arm trolley to the trigger trolley.

LOCK SENSOR (SW1)
Communicates to the control box whether or not the unit is locked. (Not shown, See page 26)

UNLOCK SENSOR (SW2)
Communicates to the control box whether or not the unit is unlocked. (Not shown, See page 26)

CONTROL BOX, OUTSIDE LIGHT BOX, AND SIGNAGE
The combination of these components are uses to control the function of the GWL-2300 Wheel Restraint and provide audio/visual communication to the dock attendant and the trailer driver.

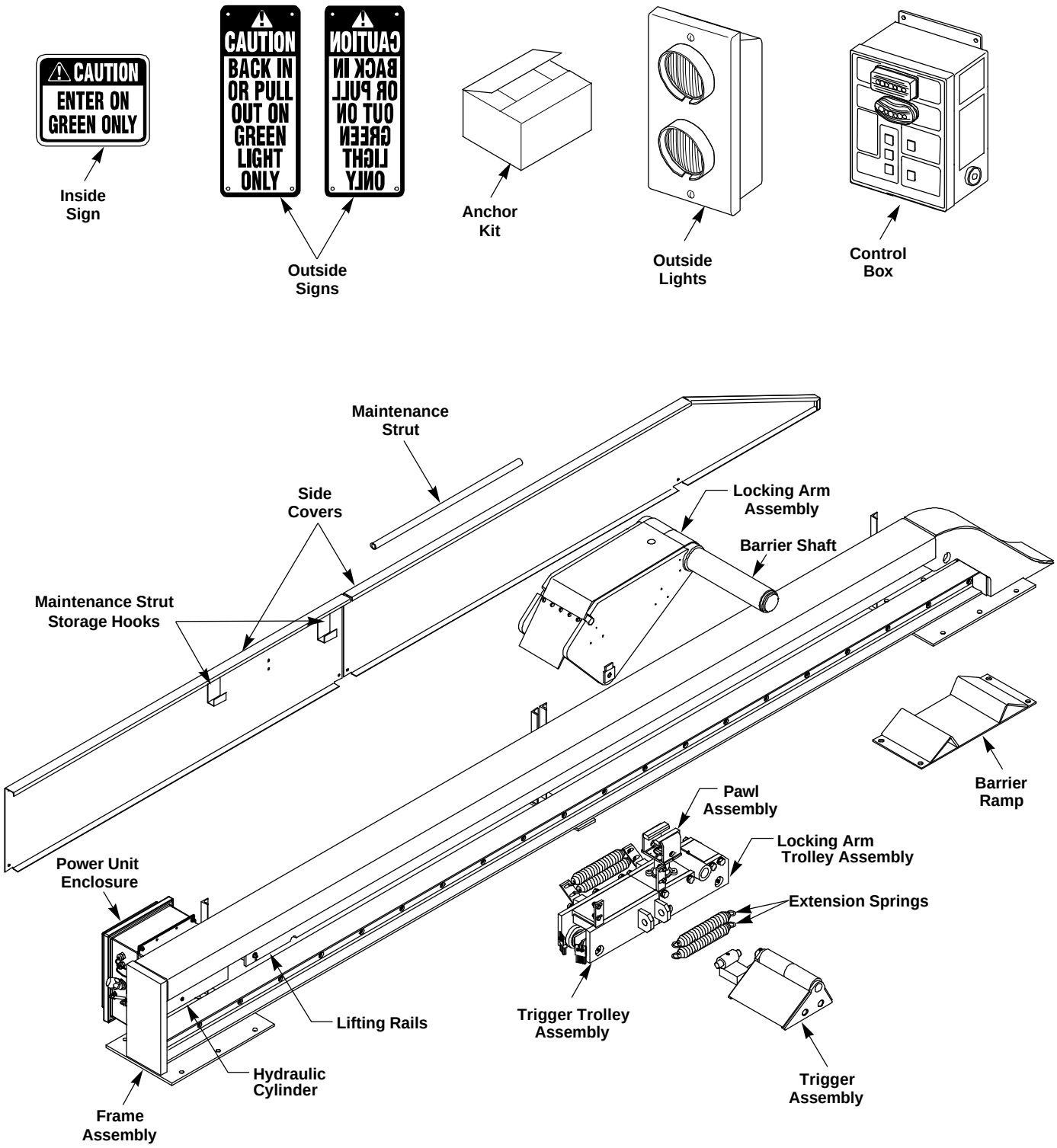

FIGURE 4 - FEATURES OF GWL-2300

INSTALLATION INSTRUCTIONS

⚠ DANGER

Post safety warnings and barricade work area, at dock level and at ground level, to prevent unauthorized use of the dock position.

The performance of any machine can be no better than the installation and application. The GWL-2300 vehicle restraint requires only ordinary application and installation skills using good workmanship and quality materials.

Follow the 7-step Installation Procedure:

1. Inspect GWL-2300 vehicle restraint components.
2. Install GWL-2300 vehicle restraint frame assembly.
3. Install wheel guides.
4. Install barrier ramp.
5. Install electrical components.
6. Fill and bleed hydraulic system.
7. Install signs.
8. Test operation.

INSPECT COMPONENTS

Open and inspect all materials. Refer to Figure 4. Immediately report any damage or material shortage. Study component assemblies and determine their proper locations. Refer to Figures 30 - 39.

GWL-2300 VEHICLE RESTRAINT POWER SOURCE

⚠ DANGER

When working with electrical or electronic controls, make sure that the power source has been locked out and tagged according to OSHA regulations and approved local electrical codes.

On occasion, the incoming electrical power for the GWL-2300 vehicle restraint is taken from a convenient nearby electrical appliance, i.e., overhead door opener. Generally, there is no problem using this sort of power source; you must, however, verify that the amperage is in accordance with local and federal codes.

The GWL-2300 vehicle restraint requires 120V, single phase 60 Hz power and 5 amps of current. Four (4) GWL-2300 vehicle restraints can be hooked into one (1) 20 amp feeder circuit per the current N.E.C. Paragraph #430-53.

WHEN IN DOUBT, CALL YOUR RITE-HITE REPRESENTATIVE OR RITE-HITE AT (800) 456-0600.

IMPORTANT

All components must be connected to a SAFETY EARTH GROUND where indicated. The SAFETY EARTH GROUND must conform to the current National Electric Code Section 250-81 section (a) or section (c) for a grounding electrode system.

CONCRETE APPROACH REQUIREMENTS

Verify the approach meets the following criteria:

1. The approach must be concrete, 137" wide by 300" long x 6" minimum thickness. See Figure 5.

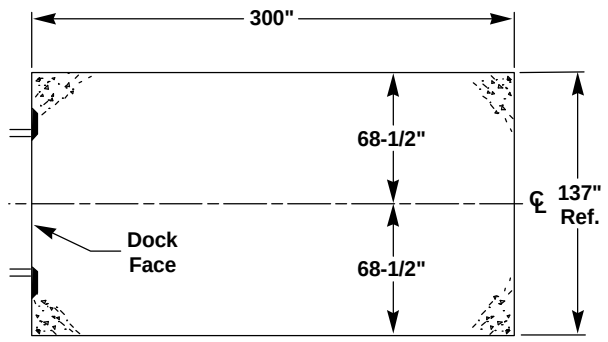

FIGURE 5 - CONCRETE PAD

2. The approach must be free of discontinuities (such as cracks, potholes, etc.) greater than 1/4" where the trigger will travel. In addition, the trigger must not travel more than 1" below the base plate of the rail assembly without surface preparation under trigger path. See Figure 6, Section A-A.
3. The GWL-2300 vehicle restraint can be installed and shimmed up to 1" without modification. If greater than 1" of shimming is necessary, longer anchors and trigger bridge plate will be required. Please consult RITE-HITE.

⚠ WARNING

Never weld on the GWL-2300 vehicle restraint when the electrical components are connected to the main control box and the power to the box is "ON". Electrical current from the welder can "FEED BACK" through the circuit and could cause injury or damage electrical components.

TRENCH DRAINS

1. If the GWL-2300 vehicle restraint crosses a trench drain parallel to the dock face, the drain grate must be bridged with a 1/4" thick steel plate where the trigger will travel.
2. If the trench drain lies in the same position as a GWL-2300 vehicle restraint anchor plate, a steel plate must be welded to the mounting pad and anchored to the approach. See Figure 6.

INSTALLATION OVER A TRENCH DRAIN AND SHIMMING INSTRUCTIONS

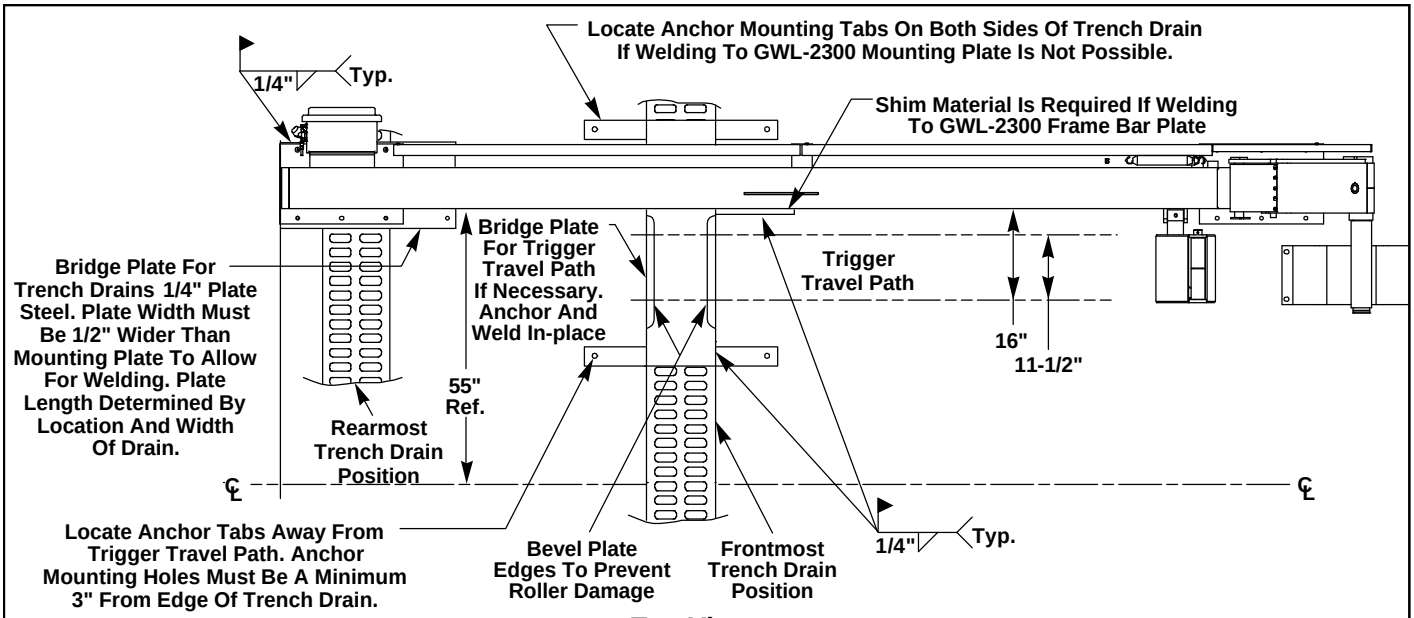

Top View

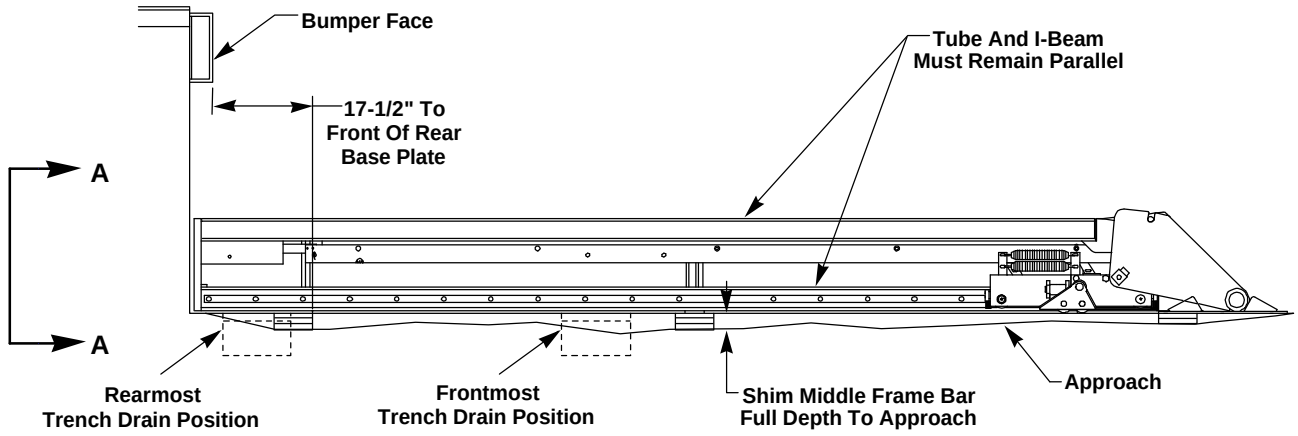

Side View

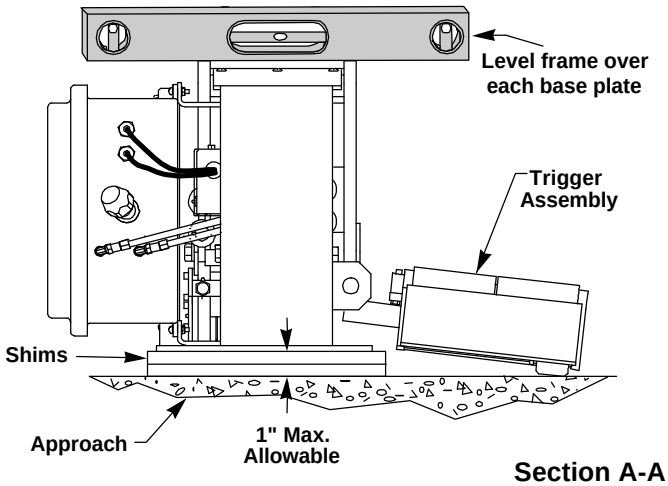

Section A-A

IMPORTANT

A maximum shimming of 1" thickness is permitted for installations of the GWL-2300. Make sure that solid metal shims are used. Shims must fully support the mounting plate and are secured in place with the mounting anchors. Use the holes in the mounting plate as a drilling guide. Consult RITE-HITE Applications where more than 1" of shimming is required.

FIGURE 6 — INSTALLATION OVER A TRENCH DRAIN AND SHIMMING

INSTALL FRAME ASSEMBLY
LOCATE THE CENTERLINE

1. Secure a 20' length of string at the lower right edge of the dock leveler pit at the dock face. Measure out 5' of string, and holding a piece of chalk at the end of the 5' length of string, draw a large arc which begins well before and extends past where you expect the centerline to be. See Figure 7.
2. Repeat Step 1, this time beginning at the lower left edge of the dock leveler pit at the dock face. Where the two arcs intersect indicates one point of the centerline.
3. Repeat Steps 1 and 2, using 20' of string instead of 5'. Use the intersections of both arcs as points to snap a chalk line. This line is the centerline (Line A) for the frame assembly.

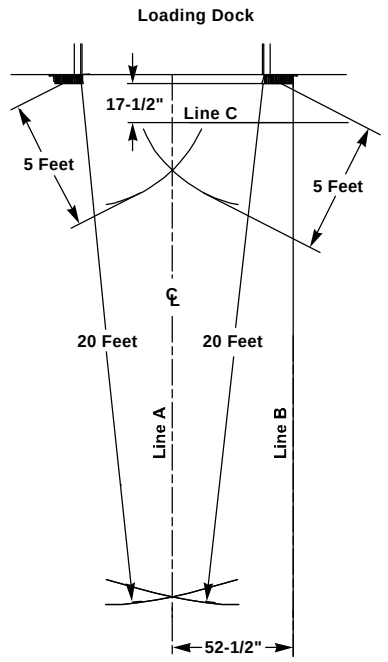

FIGURE 7 - LOCATING CENTERLINE

LOCATE FRAME POSITION

1. Measure to the right of the centerline 52-1/2". Snap a chalk line for Line B. To ensure Line B is parallel to the centerline (Line A), measure and mark at several locations. See Figure 7.
2. Measure 17-1/2" off each bumper face. Snap a chalk line for Line C. See Figure 7.

POSITION FRAME

1. Remove side covers from rail assembly prior to positioning and anchoring.
2. Position the GWL-2300 vehicle restraint along the B and C lines as shown in Figure 8. The front edge of the rear mounting plate should be aligned with Line C. The edge of the front and rear base plate should be aligned with Line B. See Figure 8.

SHIM AND ANCHOR FRAME

1. Starting at one end of the frame assembly, see Figure 6 for shimming instructions, drill anchor holes using mounting plates as templates. Insert anchor bolts, tapping each into the drilled holes with a hammer so that the head of the anchor is as close to the anchor plate as possible without causing the frame to twist.
2. After all concrete anchors have been inserted, using a torque wrench, tighten each to 100 ft-lbs of torque. Verify that dimension between top of I-beam and tube is consistent, and frame stays level above each base plate. See Figure 6.

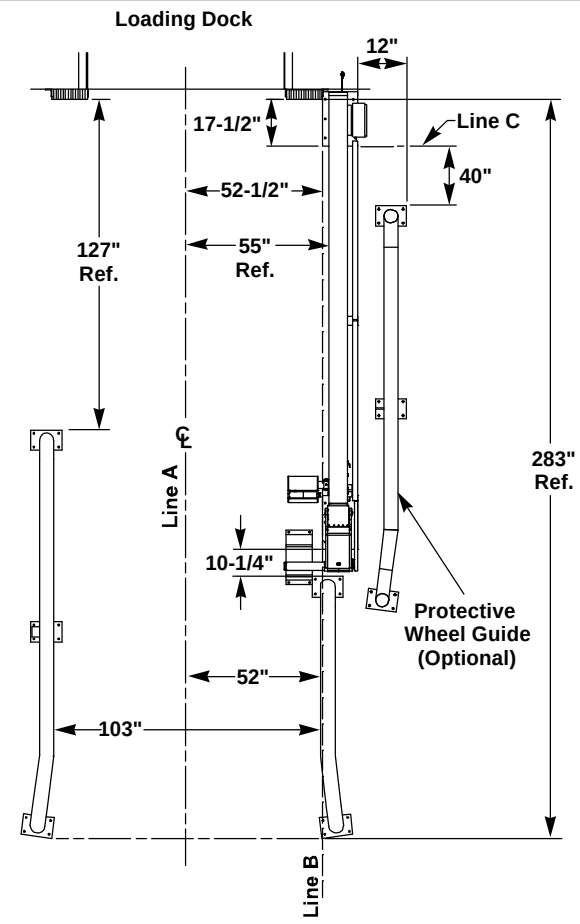

FIGURE 8 - ANCHORING TRACK

INSTALLATION WHEEL GUIDES

NOTE

If there is another loading dock on the right side of the GWL-2300 vehicle restraint installation and this position does not have wheel guides, it is required to install a protective wheel guide. See Figure 8.

1. Measure 10-1/4" off the stored end mounting plate and snap a chalk line.
2. Measure 52" off the centerline to the right, 51" left and snap a chalk line.
3. Position short wheel guide (GWL-2300 vehicle restraint side) so nearest mounting plate is 10-1/4" from GWL-2300 vehicle restraint mounting plate and inside edge of guide tube is 52" from the centerline. See Figure 8.
4. Position long wheel guide so front most mounting plate is aligned with the front most mounting plate of the short wheel guide and so that the inside edge of the guide tube is 51" from the centerline. See Figure 8.
5. Measure and verify that there is 103" between wheel guides. Adjust as required and anchor to approach.
6. Insert concrete anchors and tighten, using a torque wrench, to 100 ft-lbs.

⚠ CAUTION

The locking arm is heavy. Lift it, using the supplied strut (located on the inside of the rear side cover), to the required position by fully inserting the strut into the tube and then moving the locking arm upwards in one motion. Lift carefully and stand clear to avoid pinching fingers or feet. Lifting by hand may cause back injury. Secure the arm in the elevated position against unintentional movements. See Figure 9.

INSTALL BARRIER RAMP

1. Position ramp at outer edge of barrier as shown in Figure 9.
2. Verify locking arm clearance by manually lowering and raising the locking arm weldment in and out of the ramp. Use the maintenance strut located on the inside of the rear side cover.
3. Insert (4) concrete anchors and torque to 100 ft-lbs.

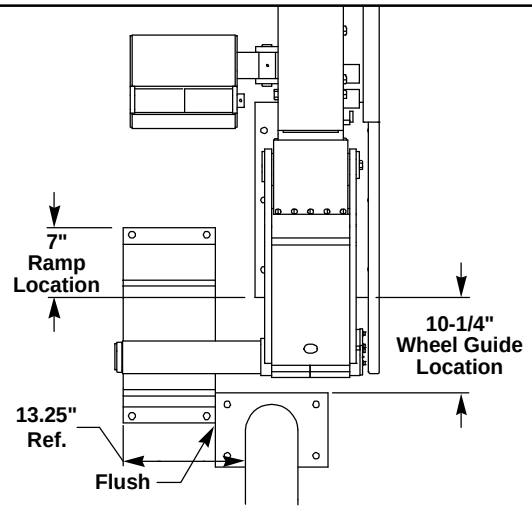

FIGURE 9 - INSTALLING BARRIER RAMP AND FRONT WHEEL GUIDE

LOCKING RANGE

⚠ WARNING

Always check that the vehicle is parked firm against the bumpers before locking the GWL-2300 vehicle restraint.

These operating instructions are intended for ALL DOCK PERSONNEL who are involved in loading/unloading trucks and trailers. GWL-2300 vehicle restraint is a safety system used to accommodate trucks and trailers with tire diameters ranging from 30" to 44", while the rear axle is located at a maximum of 158" away from the face of the loading dock. See Figure 10.

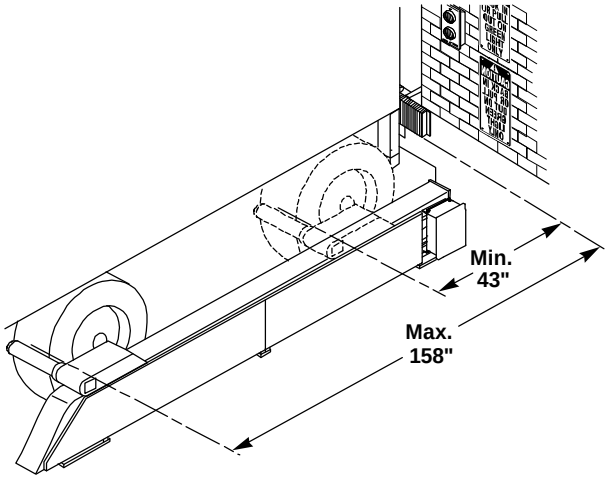

FIGURE 10 - WHEEL POSITION RANGE

INSTALL ELECTRICAL COMPONENTS AND SIGNS

⚠ DANGER

When working with electrical or electronic controls, make sure that the power source has been locked out and tagged according to OSHA regulations and approved local electrical codes.

1. Mount control box, outside light box and signs as shown in Figure 11.
2. Run conduit from control box to outside light box and from outside light box to junction box. See Figure 12.
3. Run 3/4" liquid tight flexible conduit from junction box to power unit enclosure.

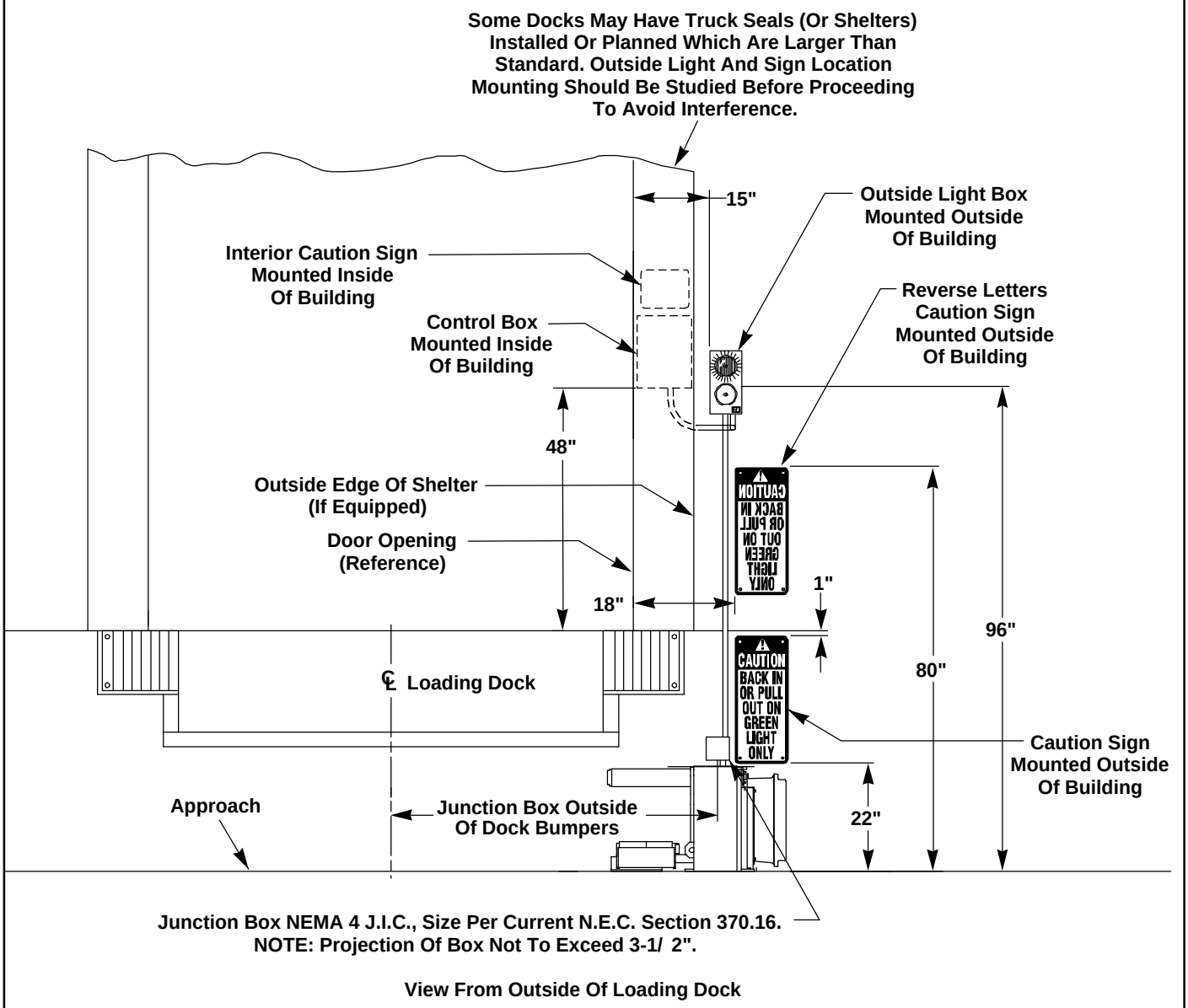

FIGURE 11 - ELECTRICAL INSTALLATION AND SIGN LAYOUT

WIRING DIAGRAM

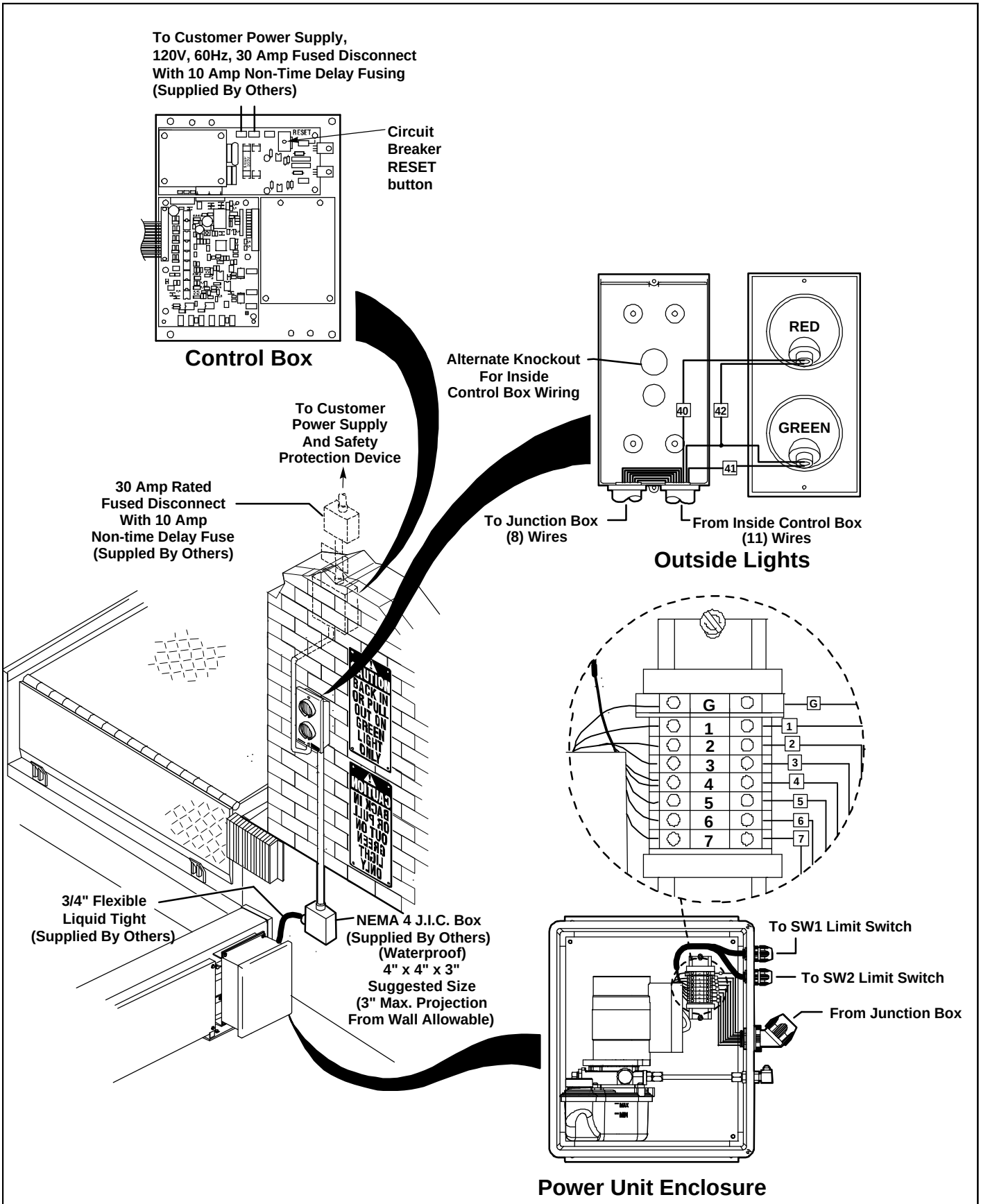

FIGURE 12 - WIRING DIAGRAM

ELECTRICAL SCHEMATIC (STANDARD)

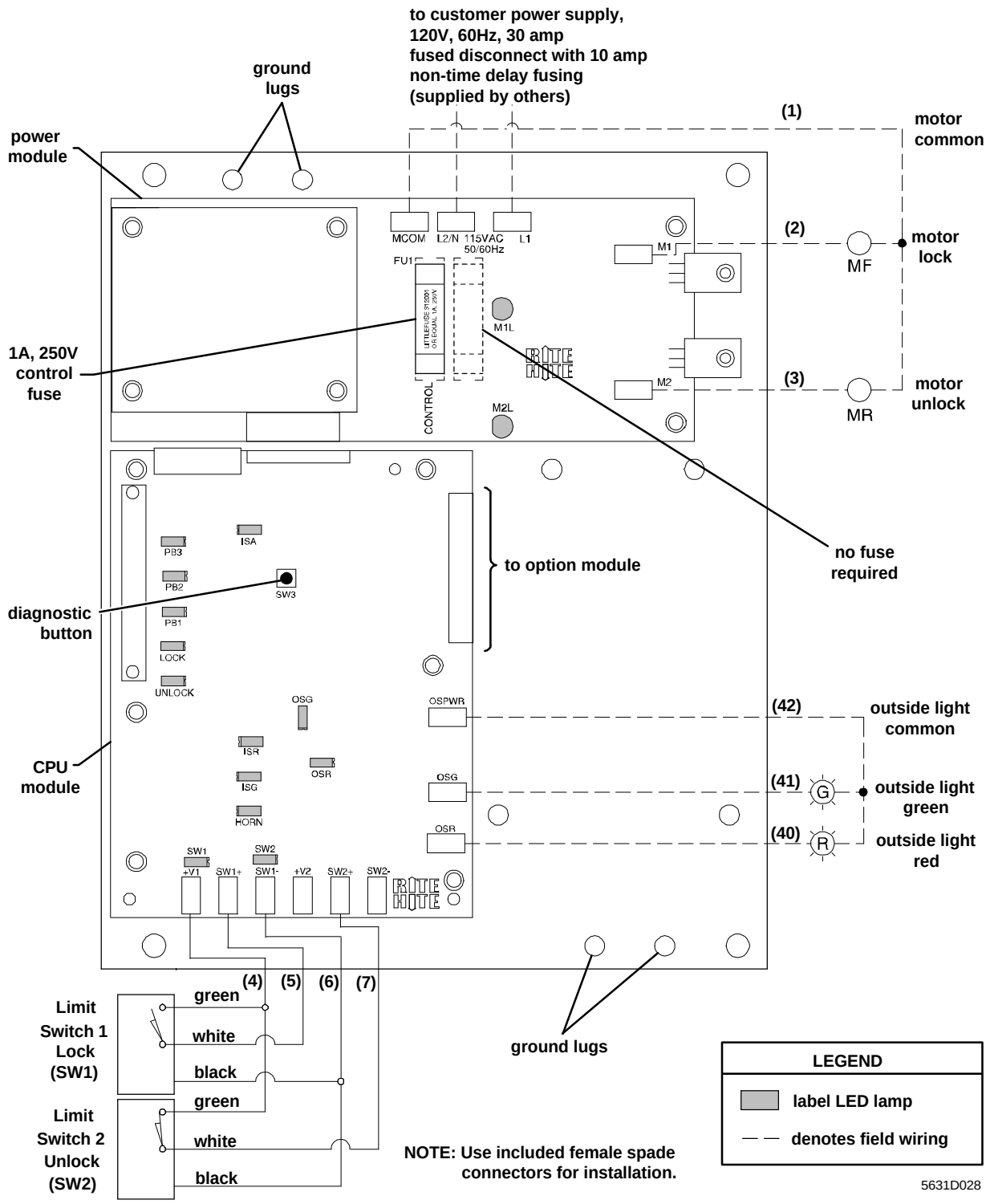

FIGURE 13 - ELECTRICAL SCHEMATIC (STANDARD)

ELECTRICAL SCHEMATIC (OPTIONAL

NOTE: The standard wiring is not shown in this drawing to better show the option module wiring. For information on standard wiring, see previous page.

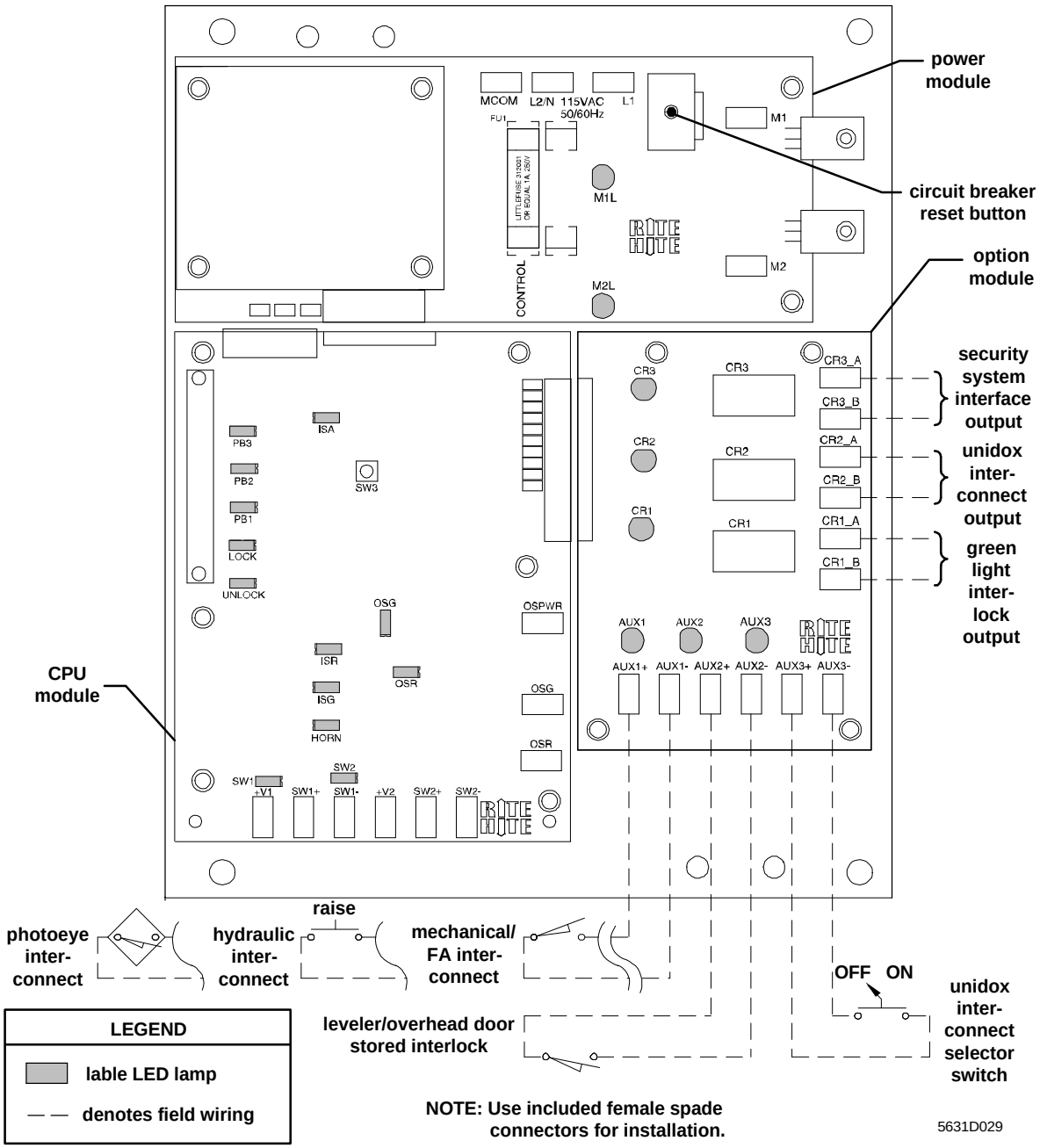

FIGURE 14 - ELECTRICAL SCHEMATIC (OPTIONAL)

DANGER

Post safety warnings and barricade work area, at dock level and at ground level, to prevent unauthorized use of the dock position.

FILL AND BLEED HYDRAULIC SYSTEM

1. Using the maintenance strut, position the locking arm assembly to a "locked" (up) position to simulate a truck at the dock.
2. Fill hydraulic reservoir using the supplied (MIL-H-5606) hydraulic fluid.
3. Press and hold the diagnostic button inside the control box until the horn chrips (refer to Figure 13 on page 15).
4. Once horn chirps enter code 1-1-1-1 by using the buttons on the face of the control box. Controls are now in FILL mode. Holding the LOCK and UNLOCK button will run the pump forward and reverse.
5. Cycle the vehicle restraint to remove air from the system. Add remaining hydraulic fluid. Stop cycling once the cylinder extends and retracts without hesitation.
6. Press diagnostic button inside control box to exit FILL mode.

OPERATING TEST

The GWL-2300 vehicle restraint is now ready for the initial test procedure, which must be carried out prior to use of the device. Follow *Operating Procedures,* page 18.

Make sure that electrical schematics are in the control box and that working area is clean and free of any packaging material. The GWL-2300 vehicle restraint should now be installed properly and ready for use.

WARNING

If light sequence differs from what is described above, check the electrical installation. If the situation can not be resolved, call RITE-HITE for assistance. NEVER leave the job site with the GWL-2300 vehicle restraint not working properly. Store the locking arm in its rest position before you leave the site.

CAUTION

Stand clear when you push the locking arm to its stored position. The arm should only be moved by hand for the initial installation and test procedure by authorized and trained personnel. NEVER leave the arm in the elevated position.

OPERATING PROCEDURES

NO TRUCK PRESENT

If the GWL-2300 vehicle restraint is in the UNLOCKED position (shaft assembly is down and stored in barrier ramp), the Light Communication System should give the following signals:

1. OUTSIDE light flashing GREEN, which indicates that a vehicle may pull into or out of the loading bay.
2. INSIDE light flashing RED, which indicates that loading or unloading is not permitted, since the truck is not secured against the building. See Figure 15.

LOCKING A TRUCK/TRAILER

It is assumed that the loading bay is empty (no truck). The outside GREEN light and the inside RED light are flashing, the barrier is down. A truck can now approach the loading position. As the truck backs in, it will activate the trigger, causing the locking arm to come up. The mechanism will automatically adjust to the correct wheel size. The truck will move locking arm and trolleys into position automatically. When the truck is parked firmly against the bumpers, the operator can lock the vehicle.

To lock the vehicle, the LOCK button must be depressed momentarily. The outside light will change instantly from flashing GREEN to flashing RED. The inside light will remain steady RED until the locking mechanism is engaged properly. Once it is engaged, the inside light will change to flashing green. The truck may now be serviced. The light communication and truck position are shown in Figure 16.

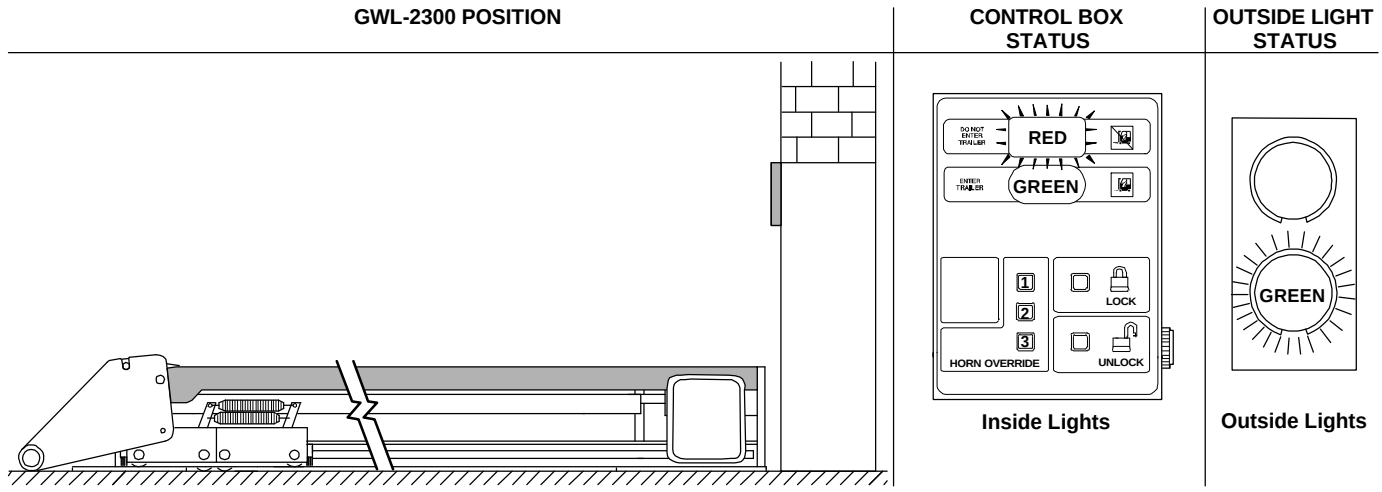

FIGURE 15 - STORED POSITION, INSIDE RED LIGHT AND OUTSIDE GREEN LIGHT

TRUCK LOCKED

If the GWL-2300 vehicle restraint is in the LOCKED position with the barrier up and the locking mechanism engaged properly, the Light Communication System should give the following signals:

1. OUTSIDE light flashing RED, indicating that the truck driver is not permitted to leave.
2. INSIDE light flashing GREEN, indicating that the truck may now be loaded or unloaded. See Figure 16.

UNLOCKING A TRUCK/TRAILER

In order to release the truck after completion of the loading/unloading process, the UNLOCK pushbutton must be pressed. The inside light will turn instantly to steady RED, while the outside light remains flashing RED until the locking mechanism is disengaged. The outside light will turn to flashing GREEN, allowing the truck to depart. The truck will automatically move the locking arm to the stored position when departing.

IMPORTANT

On occassion the truck/trailer may move forward during servicing putting pressure on the pawl assembly. If an unlock "Fault" occurs the truck/trailer may need to be positioned firmly against the dock bumpers to release the pressure on the pawl assembly.

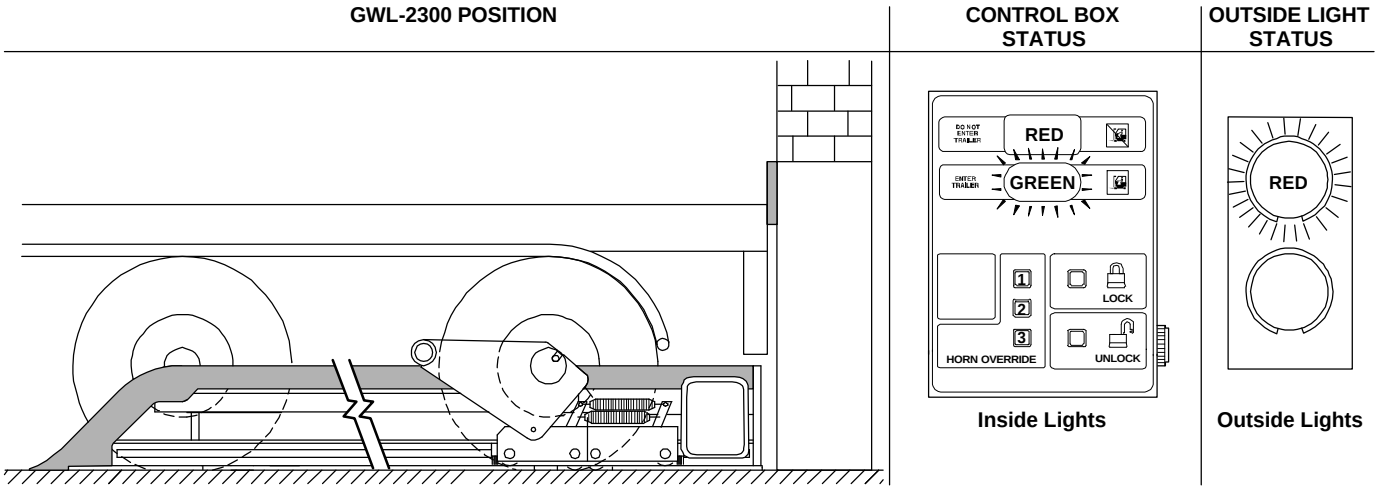

FIGURE 16 - TRUCK LOCKED AGAINST THE BUMPERS

TRUCK NOT PROPERLY LOCKED

In case the locking mechanism can not engage properly, the alarm will sound. The outside and inside lights will show flashing RED. The light communication, alarm and truck position are shown in Figure 17.

TRUCK NOT PROPERLY LOCKED, HORN SILENCED

DANGER

Before operating "HORN OVERRIDE", secure trailer by other means.

The horn may be silenced AFTER the trailer has been secured by other means. This can be done by entering the horn silence code. Both inside lights will now flash (red and green) and all control buttons are inactive. See Figure 18. Once loading is completed, enter the horn silence code and press the unlock push button. The truck/trailer may now depart.

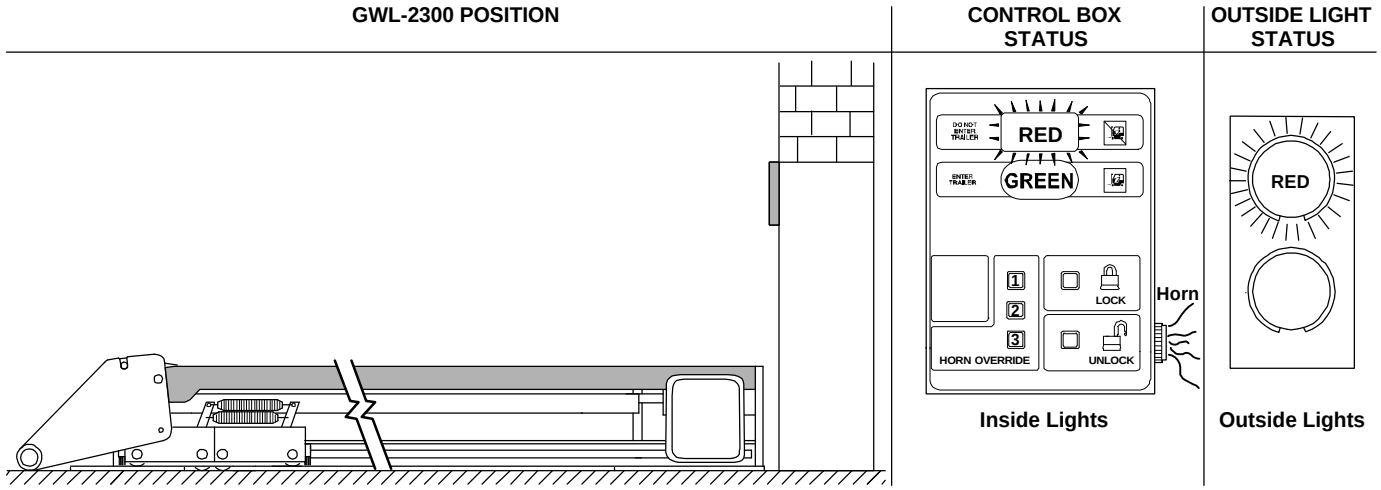

FIGURE 17 - FAULT MODE, TRUCK NOT PROPERLY LOCKED, HORN ON

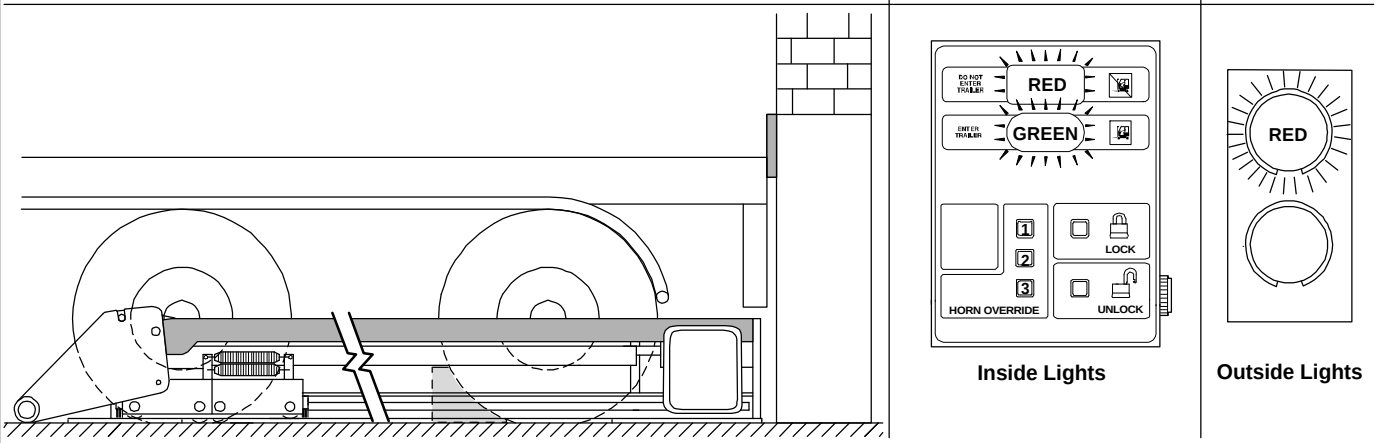

FIGURE 18 - FAULT MODE, TRUCK NOT PROPERLY LOCKED, HORN SILENCED

VEHICLE RELEASE DURING LOSS OF POWER

CAUTION

Do not remove lock arm when a truck tire is present.

During loss of power, the GWL-2300 vehicle restraint will not automatically disengage the vehicle being serviced. The truck must be manually released by the following method. See Figure 19.

PROCEDURE

1. Lockout/Tagout controls.
2. Remove pin which connects the hydraulic cylinder to the Lifting Rails. See figure 19.
3. Place pry bar in hole shown in figure 20. Pry towards the front of the restraint, lowering the lifting rails, disengaging the locking pawl.
4. Do not use equipment until reassembled.

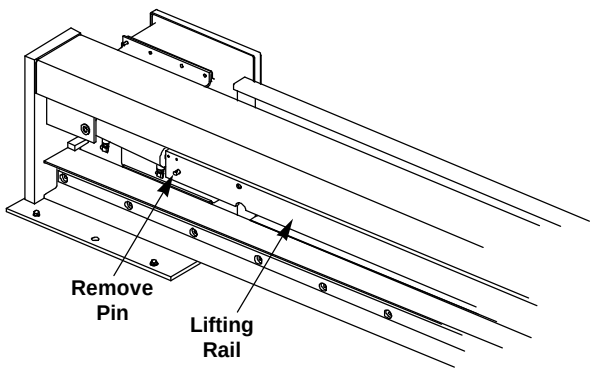

FIGURE 19 - MANUALLY RELEASING TRUCK

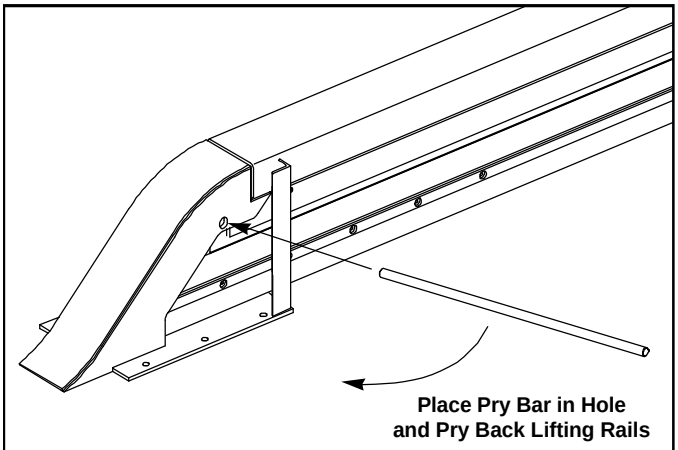

FIGURE 20 - LOCK RAILS LOWERED

SNOW REMOVAL PROCEDURE

⚠ WARNING

Wheel guides, locking arm assembly, trigger, or frame assembly may be buried underneath snow, thus not visible. Unseen obstructions may cause damage to equipment and/or bodily harm during snow removal if they should come into contact with the snow removal equipment.

In the event of snow fall, please follow the procedure below to clear and remove snow from the truck approach.

Procedure

1. Using the service strut, move the locking arm assembly all the way towards the dock face. See Figures 21 and 22.
2. Back drag snow from the approach. Be sure not to hit the wheel guides, locking arm assembly, trigger, trigger ramp and frame assembly with the plow.
3. Return the locking arm assembly to the stored position after completion of snow removal.
4. Remove snow against dock by alternate means (shovel, snowblower, etc.).
5. Manually clean on and around unit to prevent ice build-up.

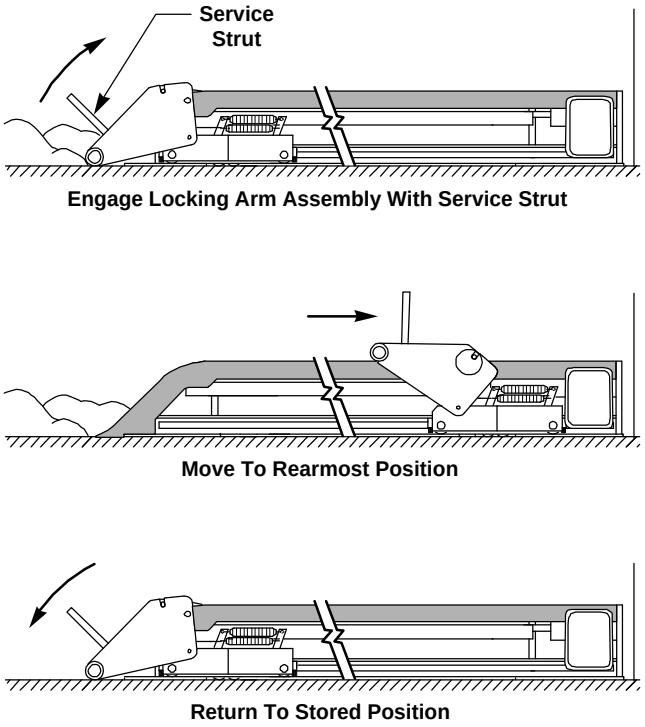

FIGURE 21 - SNOW REMOVAL

RECOMMENDED LIQUID DE-ICER

Any Calcium-Cloride based liquid de-icer.

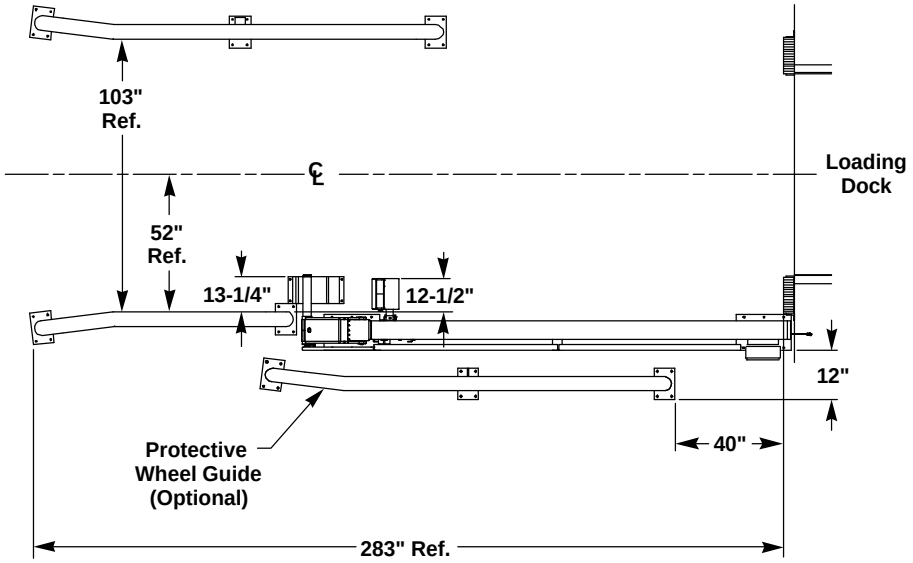

FIGURE 22 - TOP VIEW OF RAMP

MAINTENANCE

(BASED ON TYPICAL APPLICATIONS OF 8 TRUCKS PER DAY)

DANGER

When working with electrical or electronic controls, make sure that the power source has been locked out and tagged according to OSHA regulations and approved local electrical codes.

DANGER

Post safety warnings and barricade work area, at dock level and at ground level, to prevent unauthorized use of the dock position.

WARNING

A safe work place requires all lights and the horn to be working properly. DO NOT use GWL-2300 vehicle restraint if parts are broken or missing.

IMPORTANT

Maintenance may be required more frequently at loading docks exposed to harsh environments (extreme climates, corrosive chemicals, frequency of usage exceeding 8 trucks per day, etc.). Consult RITE-HITE if these conditions exist for accelerated maintenance requirements.

DAILY

1. Remove dirt, snow, ice and debris around GWL-2300 vehicle restraint.
2. Verify inside, outside lights and horn are working.
3. Replace damaged or missing light bulbs and lenses.
4. Repair, remount, or replace outside and inside signs as required.
5. Inspect dock bumpers. Missing bumpers must be replaced.

90 DAYS

1. Perform all Daily maintenance.
2. Grease rollers at fittings located on both sides of trolleys (8 places), lock trolley pin and barrier roller. See Figure 23. Use Mobilith SHC220 No. 2 grease (or equivalent temperature range lithium based grease). Two (2) to three (3) pumps at subsequent 90 Day maintenance intervals.

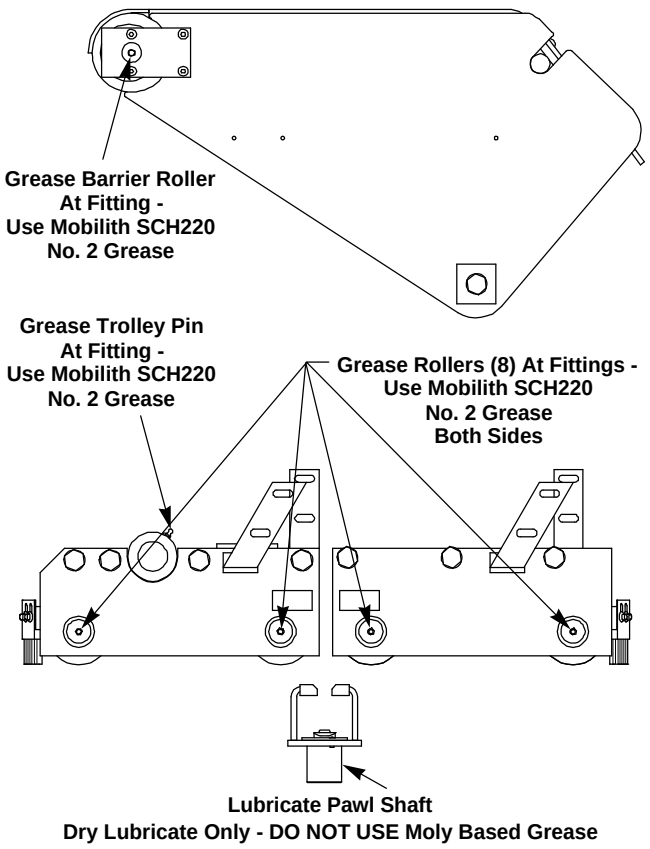

FIGURE 23 - LUBRICATION

3. Lubricate Pawl Guide Shaft with a Dry Spray Lubricate - DO NOT USE Moly-Based Grease.
4. Check the trigger and rollers for damage, ensure rollers spin freely.
5. Check brushes on trolleys and replace as necessary.
6. Inspect outside junction box, light box and power unit elclosure. They should be rigidly mounted. If loose or damaged, inspect all wires and wire connections.
7. Inspect flexible conduit from GWL-2300 vehicle restraint to junction box. Look for kinks, crushed areas, etc.
8. Perform operational test after all maintenance repairs are complete.

180 DAYS

1. Do all the Daily and 90 Day maintenance.
2. Tighten the anchor bolts to 100 ft-lbs.
3. Check barrier roller tube for damage.
4. Check if all the bolts on the UHMW strip are tight.
5. Manually push the locking arm weldment along the length of the frame to verify smooth operation. If sticky, check for proper lubrication.

360 DAYS

1. Do all Daily, 90 and 180 Day maintenance.
2. Operate unit in (5) different places to ensure the locking mechanism engages properly.
3. Disassemble both the locking arm and trigger trolley and inspect internal sliders for wear. Replace as necessary. See Figure 24.

IMPORTANT

Dock equipment must be protected by 4" thick bumpers. WORN, TORN, LOOSE, OR MISSING BUMPERS MUST BE REPLACED.

4. Inspect wear pads in locking arm assembly. See Figure 24.
5. Inspect pawl mechanism for wear on sliders.
6. Inspect bronze tooth on locking pawl.
7. Verify decals are present and legible, replace as required (see pages 30, 33).
8. Inspect lifting rail bushings for wear and replace if worn through to pin hole. Do not lubricate slots in frame.

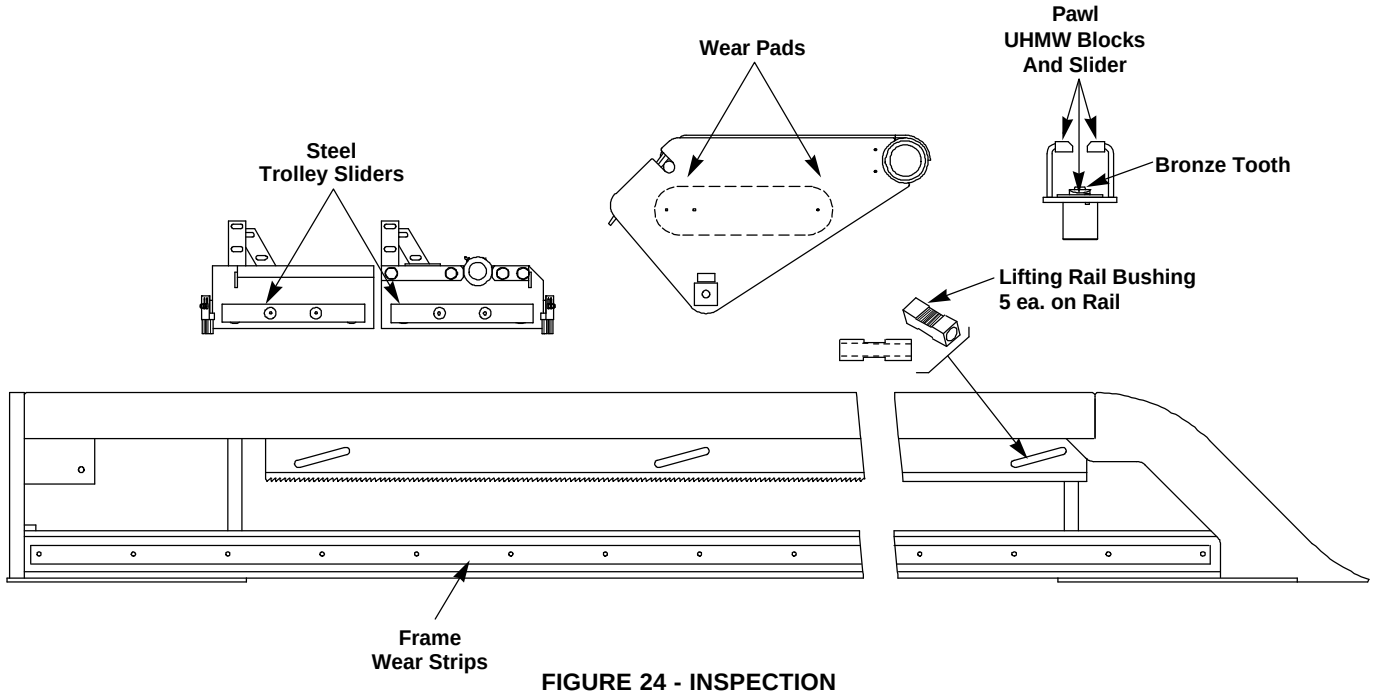

FIGURE 24 - INSPECTION

TROUBLESHOOTING

DANGER

When working with electrical or electronic controls, make sure that the power source has been locked out and tagged according to OSHA regulations and approved local electrical codes.

WARNING

To prevent personal injury use extreme care when working with electrically powered equipment. Follow all safety instructions. Disconnect all power, and keep body away from moving parts. Use caution with compressed air; foreign materials can be blown through the skin or into the eyes. Use only OSHA approved air nozzles and do not exceed recommended air pressure.

Problem	Probable Cause	Remedy
1. Cylinder does not extend when LOCK pushbutton is pushed.	Motor circuit breaker tripped, or bad. NOTE: A motor fuse is not required, unit uses circuit breaker only. Power unit power supply. Hydraulic sytem	Replace or reset. Check voltage at transformer, bridge rectifier, etc. Check fluid level and hydraulic lines for leaks.
2. No lights, but 120V at transformer.	Blown control fuse.	Replace fuse.
3. Unit goes into fault about 8 seconds after LOCK pushbutton is pushed, with actuator moving.	Bad SW1 (Lock sensor). SW1 wiring. Bronze "snaggle" tooth on pawl is damaged. Barrier is to low, pawl in not engaging rack.	Replace SW1 (lock sensor). Verify wiring per electrical schematic on page 11 or 12. Disassemble locking arm trolley and replace snaggletooth if required (page 35, item 4). Back trailer firmly against bumpers. Trailer bogeys may be too far forward to service.

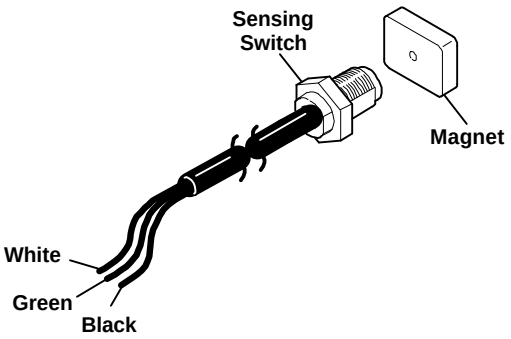

Barrier Position	SW1 Position	SW2 Position	Inside Light	Outside Light	Horn
1. Stored	Open No Mag (LED Off)	Closed Mag (LED On)	Red	Green	Off
2. Fault	Open No Mag	Open No Mag	Red	Red	On
3. Locked	Closed Mag (LED On)	Open No Mag (LED Off)	Green	Red	Off

FIGURE 25 - SENSING SWITCH TEST AND SWITCH/BARRIER POSITION CHART

SENSING SWITCH TEST PROCEDURE

1. Switch must be installed to test. Apply 12 VDC power to the green lead (black lead common).
2. Set multimeter to VDC scale for DC voltage test.
3. Attach voltmeter leads to white and black wires of sensing switch. You should have:
   — magnet present – 0 VDC
   — magnet not present – 12 VDC

MOTOR TEST PROCEDURE

1. BAD O/L: Little or infinite ohm reading (no needle movement) between lead 1 and 2, 1 and 3. Set multimeter to ohms.
2. OPEN WINDING: Infinite ohms (no needle movement) between lead 2 and 3. Check between leads 1 and 2 or 1 and 3 to determine which winding is open.
3. MECHANICAL BINDING: Motor hums. Motor leads show continuity between all windings. Hydraulic cylinder does not move.

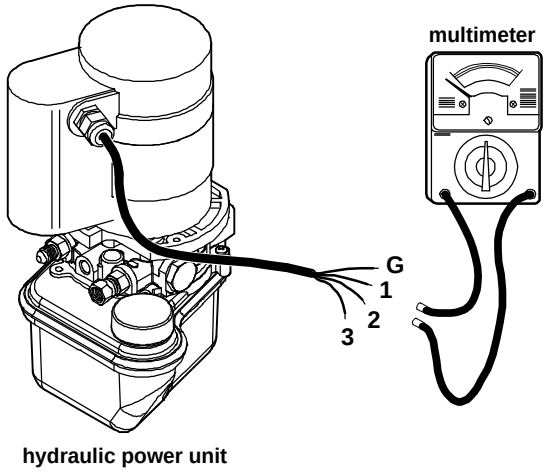

FIGURE 26 - MOTOR TEST

	LED Inputs						LED Outputs									
	SW1	SW2	LOCK PB	UNLOCK PB	PB1,2 & 3		ISR	ISG	OSR	OSG	HORN	M1L	M2L	CR1	CR2	CR3
STORED (UNLOCKED)	F	T	-	-	-		P	F	F	P	F	F	F	F	*	T
LOCKING	F	F	M	-	-		P	F	P	F	F	T	F	F	*	T
LOCKED	T	F	-	-	-		F	P	P	F	F	F	F	T	*	T
STORING (UNLOCKED)	F	F	-	M	-		T	F	P	F	F	F	T	F	*	T
PAWL FAULT	F	F	-	-	-		P	F	F	F	P	F	F	F	*	F
HORN SILENCED	?	?	-	-	M		P	P	P	F	F	F	F	T	*	T

SWI = MAG RES 1 (LOCK)
SW2 = MAG RES 2 (UNLOCK)
LOCK PB = Lock Push Button
UNLOCK PB = Unlock Push Button
PB1, 2, &3 = Horn Silence Code Push Button
PAWL FAULT = SW1 did not sense a safe LOCK/UNLOCK

ISR = Inside Red Light
ISG = Inside Green Light
OSR = Outside Green Light
OSG = Outside Green Light
HORN = Alarm Horn
M1L = Motor Up output
M2L = Motor Down Output
CR1 = Green Light Interlock Output
CR2 = Unidox Output
CR3 = Security System Output

T = Steady On
D = Double Pulse
F = Off
P = Pulsing/Flashing
* = True when Unidox is enabled
? = Varies depending on operation

FIGURE 28 - LED STATUS CHART

HORN OVERRIDE CODE AND DIAGNOSTICS

SETTING HORN OVERRIDE CODE

1. Press and hold DIAGNOSTIC button until horn chirps (approximately three seconds).
2. Enter the factory preset HORN OVERRIDE code:**1223**.
3. Enter the new HORN OVERRIDE code. The code can be one to four numbers in length.
4. Once the new code has been entered, press the LOCK button.
5. Controls reset with new HORN OVERRIDE code enabled.

If no buttons are pressed within a five minute period, the controls will automatically retain the previous code. To exit the HORN OVERRIDE code set mode at any time, press the DIAGNOSTIC button.

If code has been forgotten, follow the above procedures and enter a new code.

DIAGNOSTICS

Diagnostic mode may be entered while the restraint is in any state. To enter diagnostic mode:

1. Press and hold DIAGNOSTIC button until it chirps (approximately 3 seconds).
2. Press the LOCK button.
3. Press the UNLOCK button.
4. The horn chirps and the outside light is flashing red. The controls are in the first step of diagnostic mode. NOTE: The outside red light will remain flashing at all times except Step 5.
5. Start at Step 1 in the Diagnostic Table. If the equipment Outputs do not match the table, use the Troubleshooting section on page 25.

If no buttons are pressed within a five minute period, the controls will automatically exit the diagnostic mode. To exit the diagnostic mode at any time, press the DIAGNOSTIC button.

	Operator Action	Outputs	Troubleshooting
Step 1	Press LOCK - Go to Step 2	Outside red light is flashing. OSR LED is flashing.	Check light bulb and wiring. Check CPU module and 1 amp fuse.
Step 2	Press UNLOCK - Go to Step 1 Press LOCK - Go to Step 3	Inside red light is ON. ISR LED is ON.	Check light bulb and wiring. Check CPU module and 1 amp fuse.
Step 3	Press UNLOCK - Go to Step 2 Press LOCK - Go to Step 4	Inside Green light is ON. ISG LED is ON.	Check light bulb and wiring. Check CPU module and 1 amp fuse.
Step 4	Press UNLOCK - Go to Step 3 Press LOCK - Go to Step 5	Inside amber light is ON (if not equipped, go to Step 5). ISA LED is ON.	Check light bulb and wiring. Check CPU module and 1 amp fuse.
Step 5	Press UNLOCK - Go to Step 4 Press LOCK - Go to Step 6	Outside red light is ON. OSR LED is ON.	Check light bulb and wiring. Check CPU module and 1amp fuse.
Step 6	Press UNLOCK - Go to Step 5 Press LOCK - Go to Step 7	Outside green light is flashing. OSG LED is flashing.	Check light bulb and wiring. Check CPU module and 1 amp fuse.
Step 7	Press UNLOCK - Go to Step 6 Press LOCK - Go to Step 8	Horn is ON. HRN LED is ON.	Check horn and wiring. Test horn applying 12V DC power. Check CPU module and 1 amp fuse.
Step 8	Press UNLOCK - Go to Step 7 Press LOCK - Go to Step 9	CR1 LED is ON. (If option card installed, go to Step 12).	Check Option module.
Step 9	Press UNLOCK - Go to Step 8 Press LOCK - Go to Step 10	CR2 LED is ON.	Check Option module.
Step 10	Press UNLOCK - Go to Step 9 Press LOCK - Go to Step 11	CR3 LED is ON.	Check Option module.
Step 11	Press UNLOCK - Go to Step 10 Press LOCK - Go to Step 12	Outside red light is flashing. OSR LED is flashing.	See Step 1.

Steps 12 – 15 are used to test the mechanical Inputs and Outputs of the lock (i.e. motor, sensors, etc.). The horn will chirp when the controls enter Steps 12 – 15 to alert the operator to check the hook position. If the sensor does not read the appropriate input, the horn will double pulse and the inside red light will be ON.

NOTE
Barrier must be in the up position for Steps 12 – 15. See Figure 29.

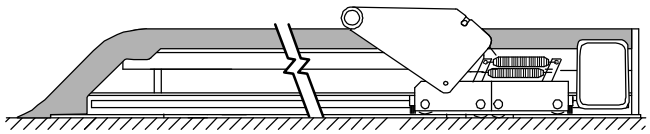

FIGURE 29 - BARRIER RAISED FOR TESTING

	Operator Action	Outputs	Troubleshooting
Step 12	Press LOCK - Go to Step 13.	Cylinder retracts to stored position. SW1 LED is OFF. SW2 LED is ON. Inside red light is ON. Outside red light is flashing.	Check power unit, verify wiring, verify hydraulic system. Check switch 1 and verify wiring. Check switch 2 and verify wiring. See Step 2. See Step 5.
Step 13	Press LOCK - Go to Step 14.	Cylinder extends to fault position SW1 LED is OFF. SW2 LED is OFF.	Check power unit, verify wiring, verify hydraulic system. Check switch 1 and verify wiring. Check switch 2 and verify wiring.
Step 14	Press LOCK - Go to Step 16.	Cylinder extends to lock position. SW1 LED is ON. SW2 LED is OFF.	Check power unit, verify wiring, verify hydraulic system. Check switch 1 and verify wiring. Check switch 2 and verify wiring.
Step 15	Press LOCK - unit will unlock, and controls exit Diagnostic mode.	—	—

REPLACEMENT PARTS

TRACK ASSEMBLY

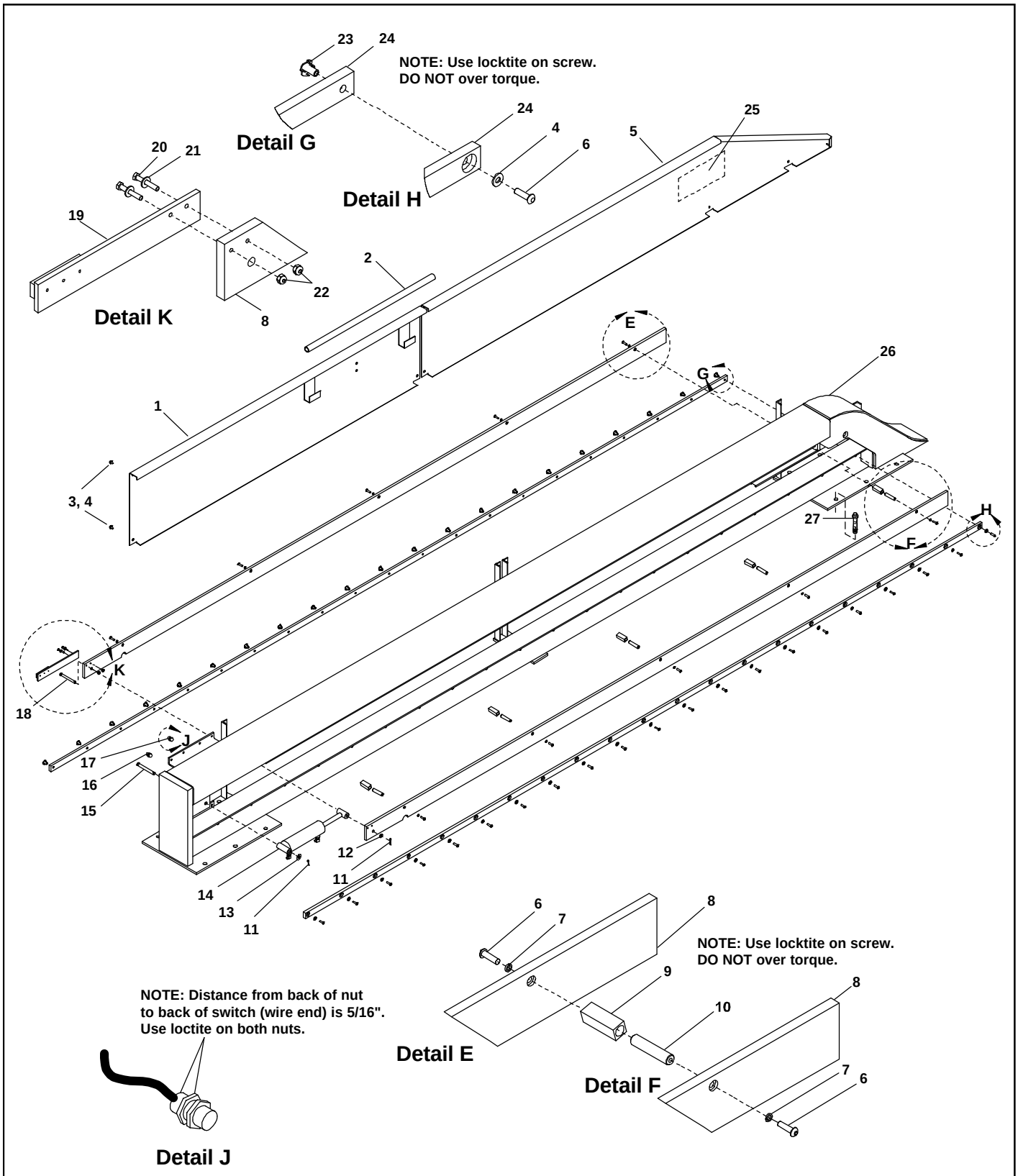

FIGURE 30 - FRAME ASSEMBLY

REPLACEMENT PARTS LIST

TRACK ASSEMBLY PARTS LIST

Item	Qty	Description	Part Number
1	1	Back Side Cover	106944
2	1	Maintenance Strut	106943
3	9	Hex. Cap Screw 1/4"-20 x 1/2" Long Stainless Steel	106939
4	30	Washer 1/4" Stainless Steel	106956
5	1	Front Side Cover	106947
6	31	Screw .250-20 x .875" Cap Button, Stainless Steel	106918
7	10	1/4" Lock Washer	51802
8	2	Lifting Rail	112735
9	5	Lifting Rail Bushing	112307
10	5	Pin .5 x 2.25 Threaded Ends 17-4PH	112738
11	2	Cotter Pin	109268
12	1	Flat Washer .375	106953
13	1	Flat Washer .500	51706
14	1	Cylinder Assembly (Includes Fittings)	112323
15	1	Clevis Pin .5 x 3.5L	112755
16	1	Unlock Switch, Mag. Res.	112759
17	1	Lock Switch, Mag. Res.	112758
18	1	Clevis Pin, .375 x 3.5L	106952
19	1	Limit Switch Flag Assembly	106955
20	2	Bolt 10-24UNC x 1.25	110691
21	2	Washer #10 Flat	51733
22	2	Nut 10-24	50597
23	21	Nut .250-20 Tee Barrel	106849
24	2	UHMW Wear Strip	106924
25	1	Decal - Safety Foot	64410
26	1	GWL-2300 Frame Weldment	112582
27	11	Anchor Bolt 5/8" x 4"	53150

REPLACEMENT PARTS

WHEEL GUIDES AND BARRIER RAMP

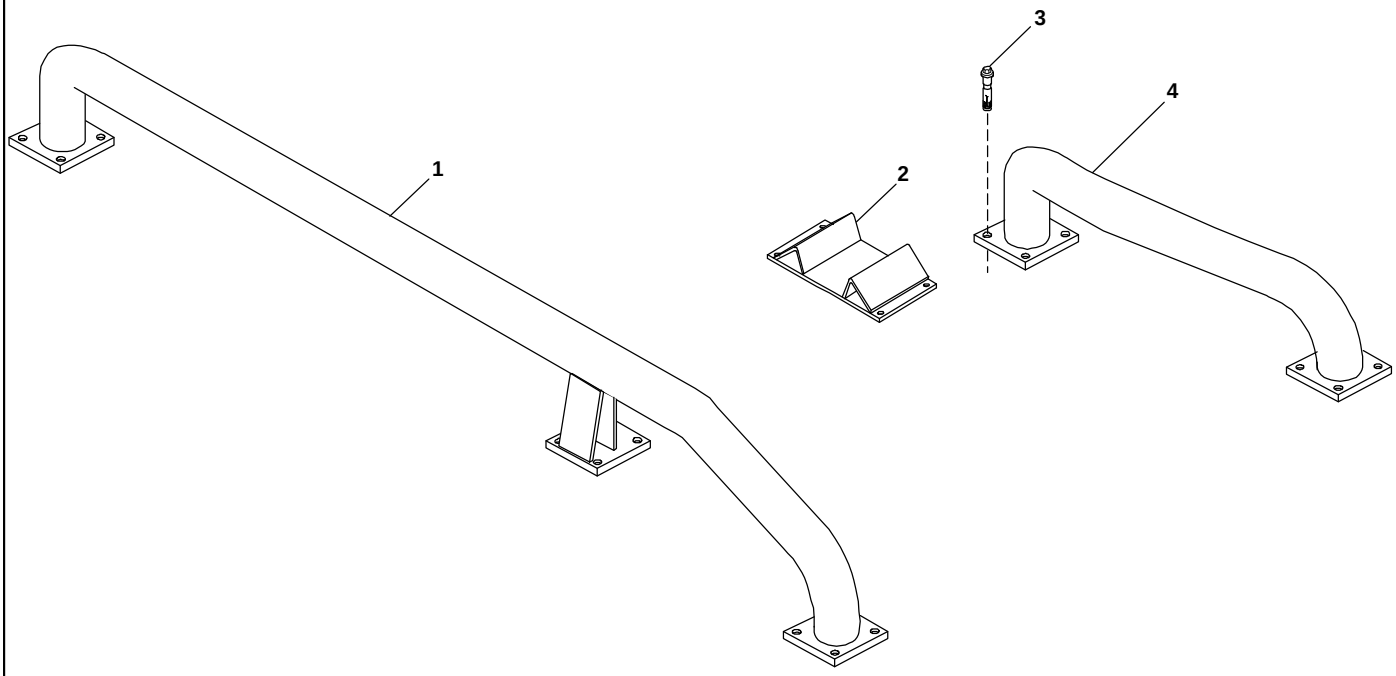

FIGURE 31 - WHEEL GUIDES AND BARRIER RAMP

Item	Qty	Description	Part Number
1	1	Wheel Guide Long	100262
2	1	Barrier Ramp	107633
3	24	Anchor Bolt 5/8" x 4"	53150
4	1	Wheel Guide Short	100263

REPLACEMENT PARTS

LOCKING ARM ASSEMBLY

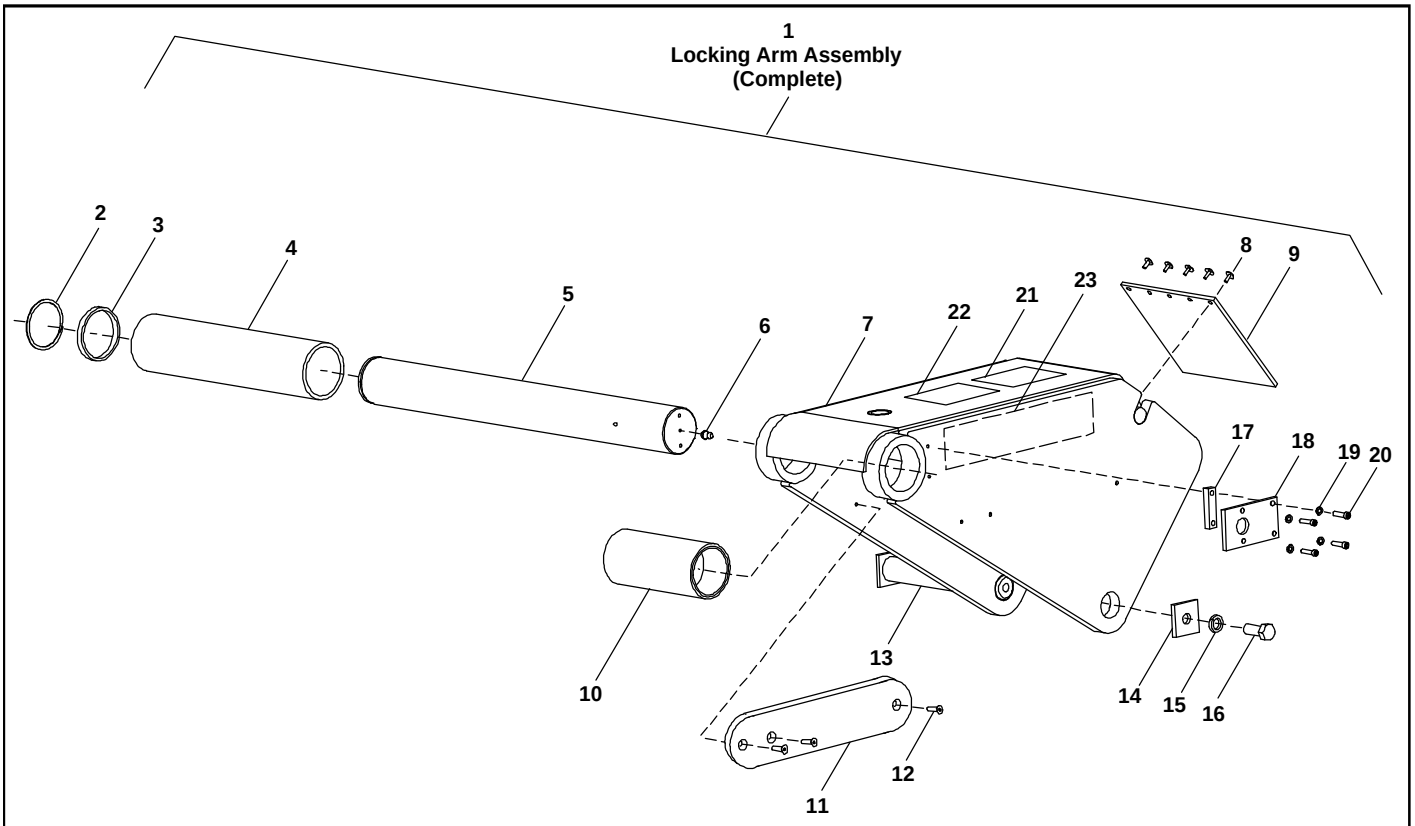

FIGURE 32 - LOCKING ARM ASSEMBLY

Item	Qty	Description	Part Number
1	1	Locking Arm Assembly - Complete (Includes items 2-20)	106829
2	1	Retaining Ring	106844
3	1	Round Tube 3/8" Long	106842
4	1	Round Tube 14-13/16" Long	106845
5	1	Locking Arm Shaft	106843
6	1	Grease Fitting	51169
7	1	Locking Arm Weldment	106830
8	5	Screw, Machine 1/4"-20 x 1/2" Long Stainless Steel	104618
9	1	Cover Flap	104620
10	1	Bearing Tube Assembly	106839
11	2	Wear Pad	112952
12	6	Screw, Flat Head 1/4"-20 x 1" Long Stainless Steel	106852
13	1	Trolley Pin Weldment	106930
14	1	Square Washer, 5/8" ID x 2" x 2" x 1/4" thick	106931
15	1	Lockwasher, 5/8" ID Stainless Steel	106936
16	1	Screw, Hex. Head 5/8"-11 x 1-1/2" Long Stainless Steel	106935
17	1	Spacer Bar	106846
18	1	Retainer	106847
19	4	Lockwasher, 1/4" ID Stainless Steel	106919
20	4	Screw, Hex. Head 1/4"-20 x 1" Long ZP (Grade 8)	110325
21	1	Decal - Caution Manual Release	113931
22	1	Decal - Hand Safety	64245
23	1	Decal - Logo GWL23	113928

REPLACEMENT PARTS

LOCKING ARM TROLLEY ASSEMBLY

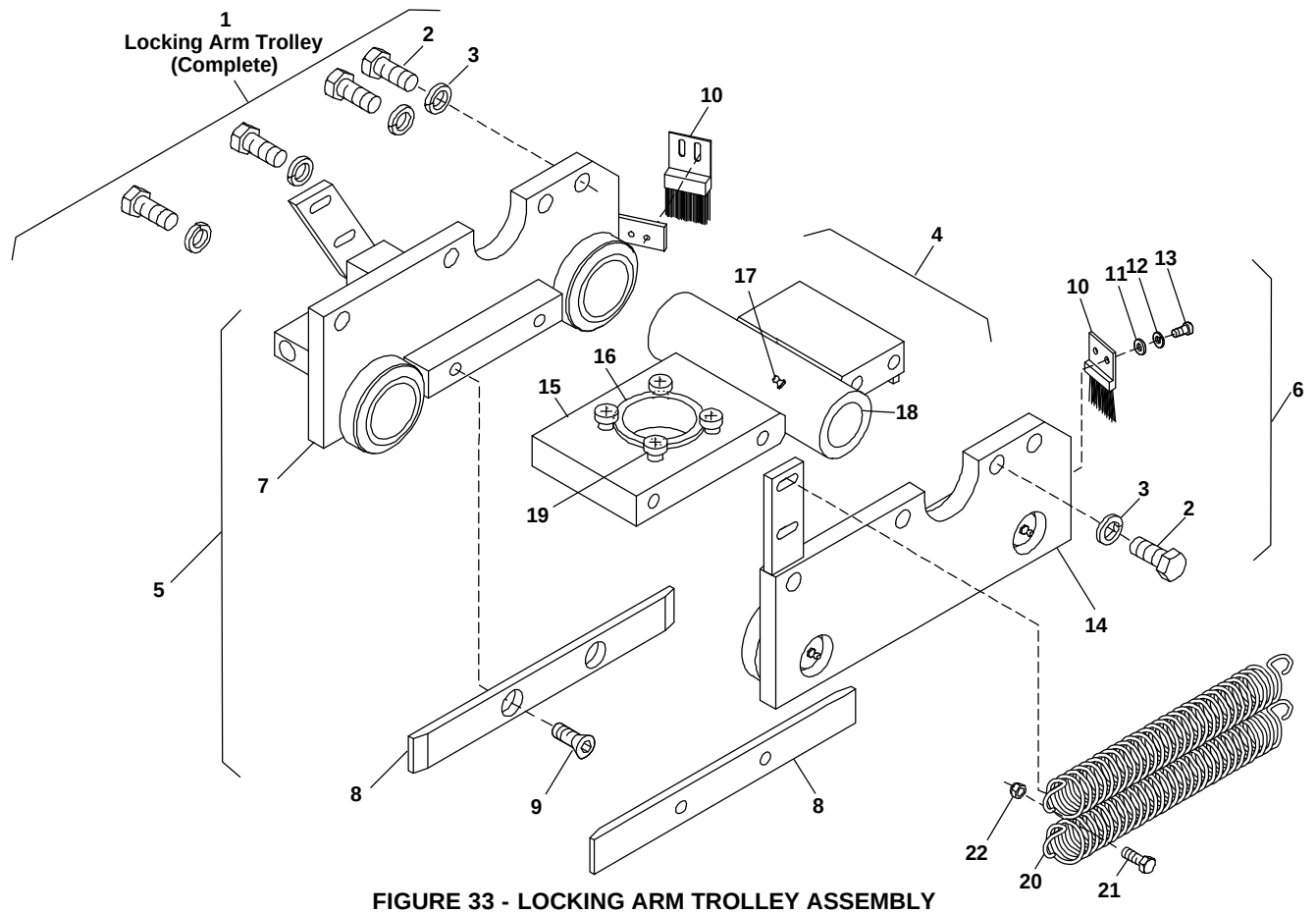

FIGURE 33 - LOCKING ARM TROLLEY ASSEMBLY

Item	Qty	Description	Part Number
1	1	Locking Arm Trolley Assembly - Complete (Includes Items 2 - 19)	109234
2	8	Screw, Hex. Head 5/8-11 x 1-1/2" Long Stainless Steel	106935
3	8	Lockwasher 5/8" ID Stainless Steel	106936
4	1	Spool Assembly (Includes Items 15 - 19)	106917
5	1	Trolley Assembly- Right (Includes Parts 7 - 13)	106863
6	1	Trolley Assembly - Left (Includes Parts 8 - 14)	106869
7	1	Trolley Weldment - Right	106853
8	2	Slider Bar	112479
9	4	Screw, Countersunk Hex. 3/8-16 x 1" Long Stainless Steel	106865
10	2	Bearing Brush	106916
11	4	Flat Washer, Beam Brush #10 Stainless Steel	106867
12	4	Lockwasher, Beam Brush #10 Stainless Steel	106868
13	4	Screw, Slotted Hex. #10-32 x 1/2" Long Stainless Steel	106866
14	1	Trolley Weldment – Left	106870
15	1	Spool Weldment	106872
16	1	Pawl Bearing	106874
17	1	Grease Fitting	109696
18	2	Spool Bearing	106862
19	4	Truss Head Screw	112326
20	2	Extension Spring	52129
21	4	Screw, Hex. Head 3/8-16 x 1" long stainless steel	106906
22	4	Hex. Nut 3/8-16 Serr. Flange ZP	51564

PAWL ASSEMBLY

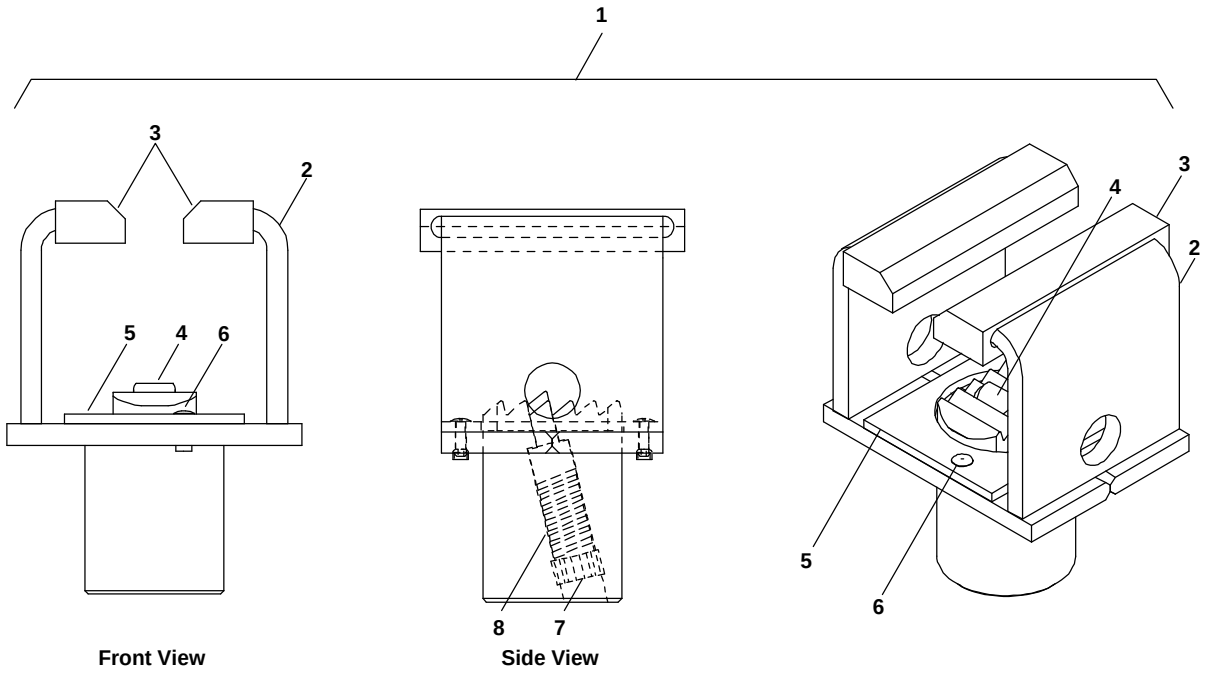

FIGURE 34 - PAWL ASSEMBLY

Item	Qty	Description	Part Number
1	1	Pawl Assembly - Complete	112584
2	1	Pawl Weldment	112585
3	2	UHMW Slider	112756
4	1	Snaggletooth	106922
5	1	Pawl Wear Pad	106934
6	2	Pop Rivet	106915
7	1	Hex. Jam Set Screw 7/8"-9 x 7/16" Long	106929
8	1	Spring 3/4" x 1-1/2" Long	106928

REPLACEMENT PARTS

TRIGGER ASSEMBLY

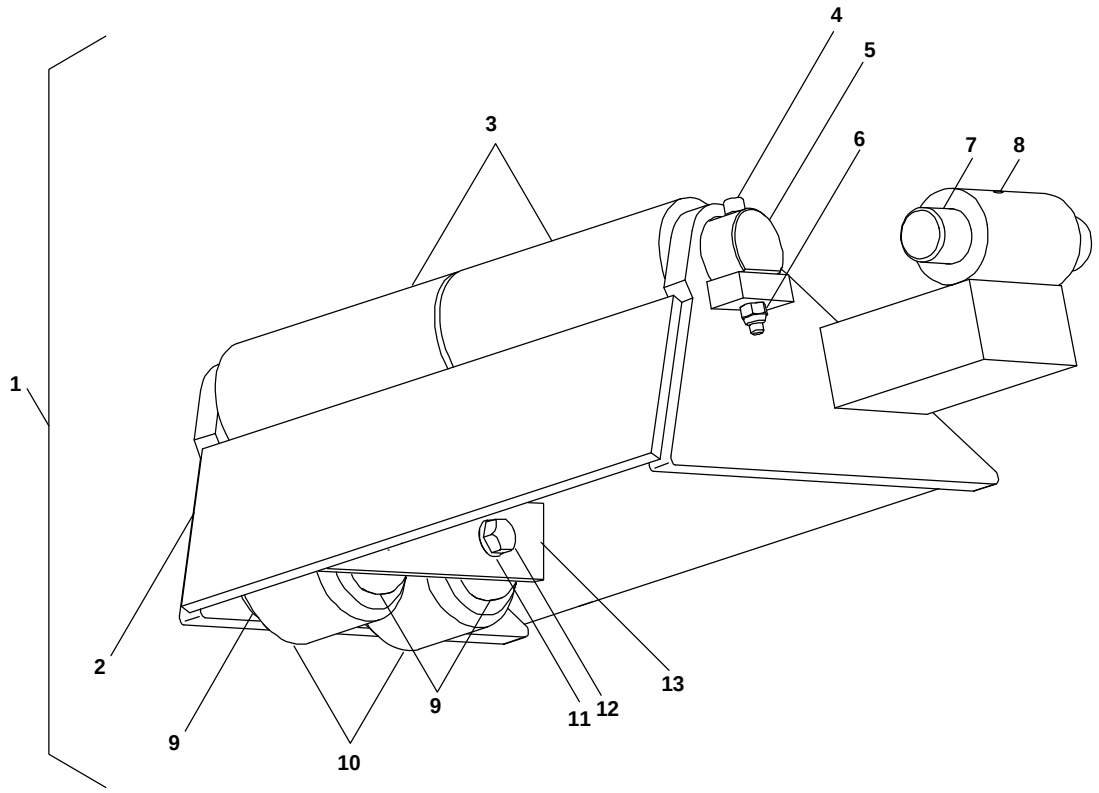

FIGURE 35 - TRIGGER ASSEMBLY

Item	Qty	Description	Part Number
1	1	Trigger Assembly – Complete	106893
2	1	Trigger Weldment	106894
3	2	Round Tube 2-1/2" OD, 1-1/2" ID x 5-1/8" Long	106913
4	1	Cap Screw 1/4-20 x 2-1/4" Long Stainless Steel	106908
5	1	Shaft 1-7/16" Dia. x 12-1/4" Long	106910
6	1	Nylock Nut 1/4"-20 Stainless Steel	106880
7	1	Clevis Pin 1" Dia. x 4-1/2" Long	106914
8	1	Cap Screw 1/4"-20 x 3/8" Long Stainless Steel	106909
9	4	Washer	106905
10	2	Trigger Roller	106912
11	2	Lockwasher 3/8" Stainless Steel	106907
12	2	Hex. Screw 3/8"-16 x 1" Long Stainless Steel	106906
13	1	Trigger Gusset	106911

TRIGGER TROLLEY ASSEMBLY

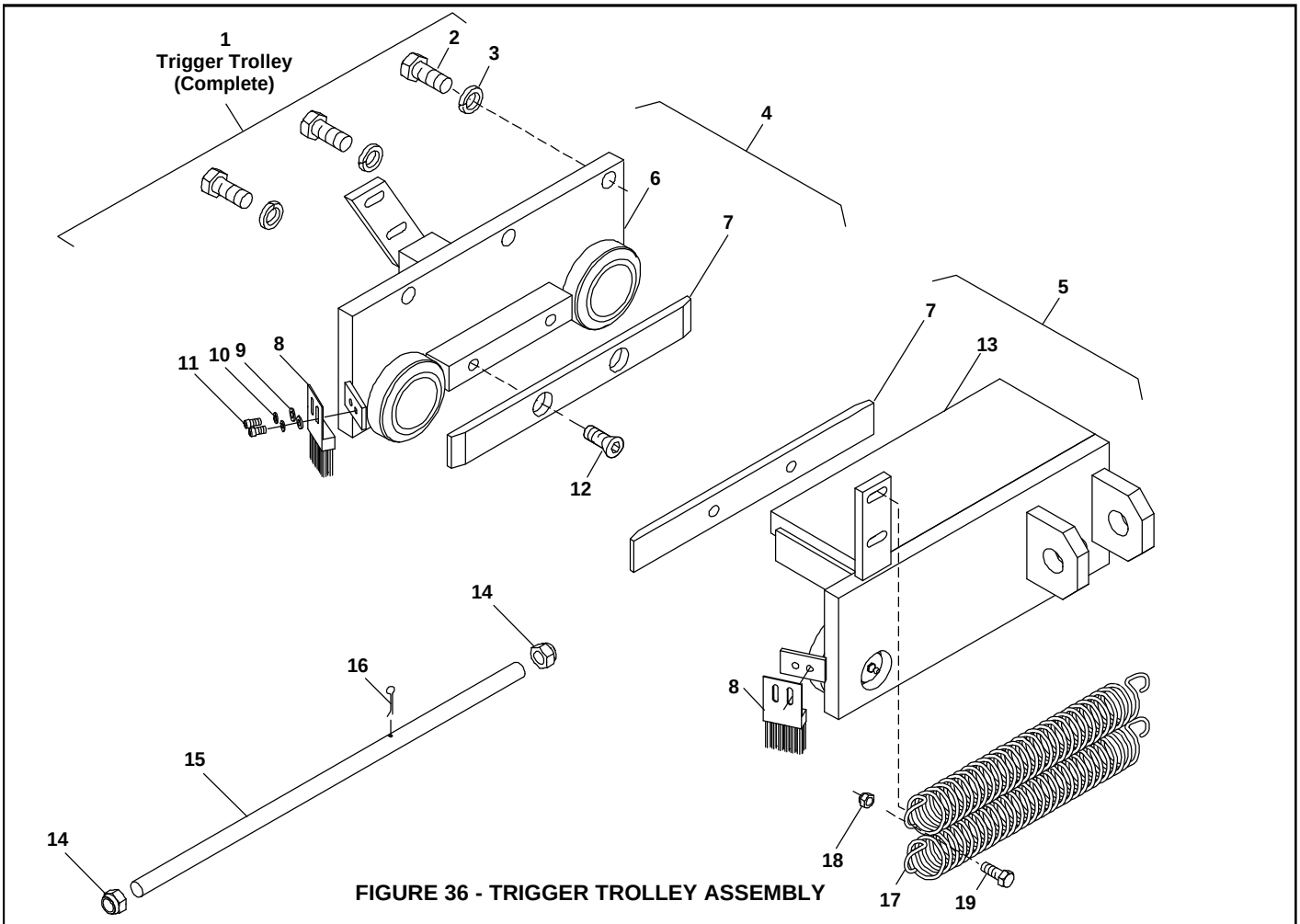

FIGURE 36 - TRIGGER TROLLEY ASSEMBLY

Item	Qty	Description	Part Number
1	1	Trigger Trolley - Complete (Includes Items 2 - 13)	109233
2	3	Screw, Hex. Head 5/8-11 x 1-1/2" Long Stainless Steel	106935
3	3	Lockwasher 5/8" I.D. Stainless Steel	106936
4	1	Trigger Trolley Assembly - Right (Includes Parts 6 - 12)	106890
5	1	Trigger Trolley Assembly - Left (Includes Parts 7 - 13)	106885
6	1	Trigger Trolley Weldment - Right	106891
7	2	Slider Bar	112479
8	2	Bearing Brush	106916
9	4	Flat Washer, Beam Brush #10 Stainless Steel	106867
10	4	Lockwasher, Beam Brush #10 Stainless Steel	106868
11	4	Screw, Slotted Hex. #10-32 x 1/2" Long Stainless Steel	106866
12	4	Screw, Countersunk Hex. 3/8-16 x 1" Long Stainless Steel	106865
13	1	Trigger Trolley Weldment – Left	106886
14	2	Nylock Hex. Nut 5/8-11 Stainless Steel	106951
15	1	Threaded Rod 5/8" x 22" Long Stainless Steel	106950
16	1	Cotter Pin 1/8" x 1" Long Stainless Steel	109268
17	2	Extension Spring	52129
18	4	Hex. Nut 3/8-16 Serr. Flange ZP	51564
19	4	Screw, Hex. Head 3/8-16 x 1" long stainless steel	106906

REPLACEMENT PARTS

ELECTRICAL REPLACEMENT PARTS

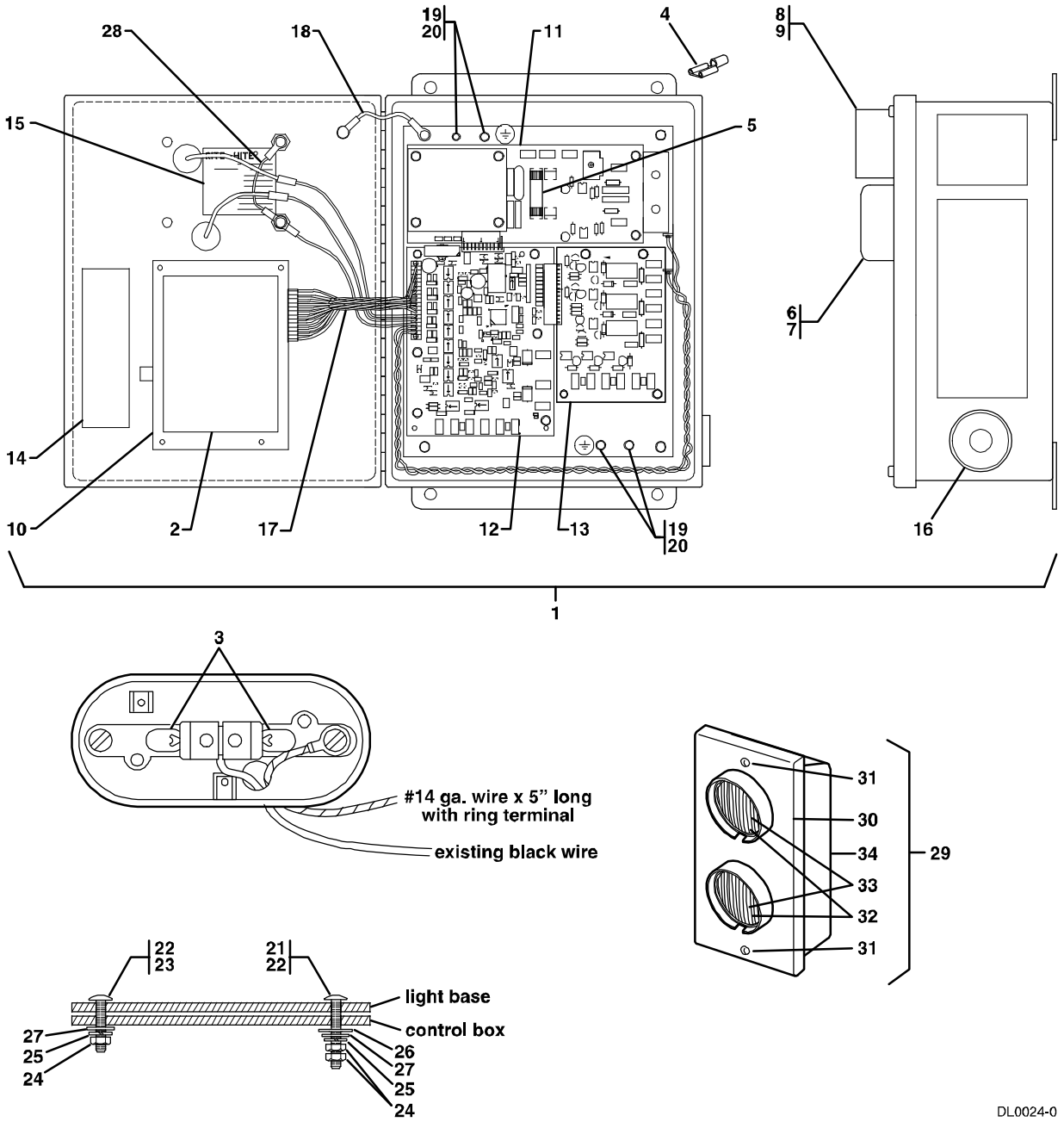

FIGURE 37 - ELECTRICAL REPLACEMENT PARTS

ELECTRICAL REPLACEMENT PARTS LIST

Item	Qty	Description	Part Number
1	1	Control box assembly, complete (Consult RITE-HITE for specific part)	103.xxx
2	1	Electrical schematic decal (Consult RITE-HITE for specific part)	108.xxx
3	4	Light bulb (#194)	55768
4	16	Insulated female terminal 1/4", 14-16 awg	55726
5	1	Fuse, 1amp 250volt fast blo	107571
6	1	Inside signal light, green assembly	55742
7	1	Inside signal light, green lens	55812
8	1	Inside signal light, red assembly	57803
9	1	Inside signal light, red lens	57840
10	1	Push button module, 5 button – includes mounting hardware	105436
11	1	Power module with circuit breaker – includes subplate & mounting hardware	105438
12	1	CPU module – includes mounting hardware	113365
13	1	Options module, not included in STANDARD control box assembly	105448
14	1	Program configuration decal (Consult RITE-HITE for specific part)	107.xxx
15	1	Full Load Amp and Voltage Decal (Consult RITE-HITE for specific part)	110.xxx
16	1	Horn, 12VDC	57383
17	1	Wiring harness	105460
18	1	Grounding harness	105456
19	4	Screw, panhead (#10-32 x .250)	105455
20	4	Lock washer, internal tooth #10	51828
21	1	Screw, round head #8-32 x 1.00 (red light only)	51656
22	2	Screw, round head #8-32 x .75	51672
23	1	Screw, round head #8-32 x .50 (green light only)	51645
24	6	Nut, hex (#8-32)	51538
25	4	Lock washer, external tooth #8	51760
26	2	Washer, nylon 0.26 ID x 0.75 OD x 0.10 thk	53164
27	4	Bushing, nylon	53147
28	1	Common wire, light assembly	108179
29	1	Outside light box, complete	18280
30	1	Outside light box cover, with lamps & lenses	18278
31	2	Screw, round head #6-32 x 3/4" Long	18364
32	2	Light bulb (GE #1156)	57187
33	2	Lamp socket assembly	57186
34	1	Outside light box, NEMA 3R, (without cover)	18277

REPLACEMENT PARTS

MISCELLANEOUS REPLACEMENT PARTS

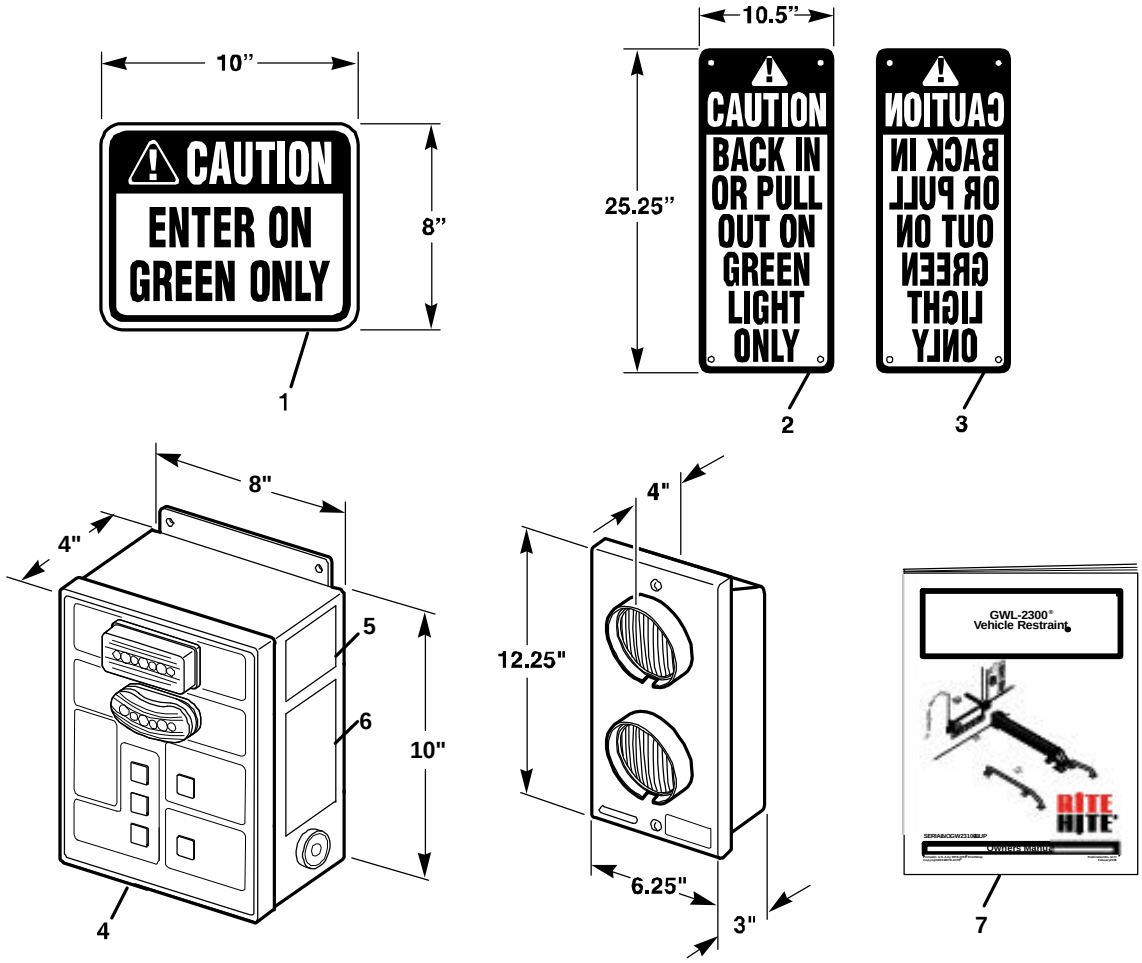

FIGURE 38 - MISCELLANIOUS REPLACEMENT PARTS

Item	Qty	Description	Part Number
1	1	Interior Warning Sign	56095
2	1	Narrow Sign (Normal Letters)	56112
3	1	Narrow Sign (Reverse Letters)	56113
4	1	Cover Decal - 5 Button	113908
5	1	Lockout/tagout Warning Decal	105430
6	1	Decal Warning GWL23	113909
7	1	Owner's Manual	Pub. No. 1177

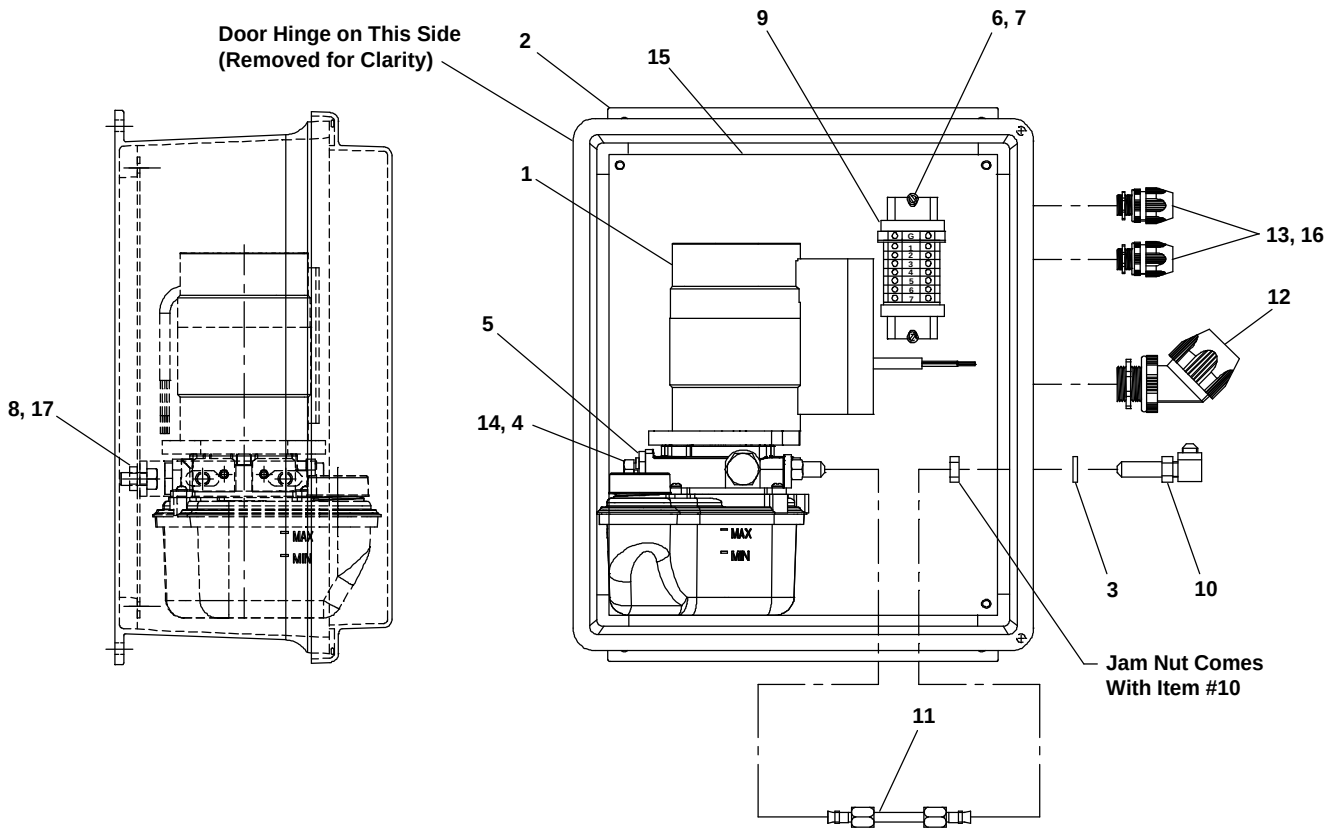

FIGURE 39 - HYDRAULIC POWER UNIT REPLACEMENT PARTS

Item	Qty	Description	Part Number
1	1	Power Unit 120/1ph/.33hp	112318
2	1	14x12x8 N4XF Enclosure	112313
3	2	.375ID x .750OD Seal	107134
4	2	Bolt .375-16 x .75	58108
5	1	Mounting Bracket	107131
6	2	Screw #8-32 x .5L	51699
7	2	Lock Washer #8	51839
8	2	Hex Nut	51534
9	1	Terminal Block Assembly	112304
10	2	90 deg. hydraulic fitting	112706
11	2	Hydraulic Hose Assembly	112881
12	1	LiquidTite Fitting, 45 deg. .75-14	112882
13	2	Cord Grip	112345
14	2	Lock Washer .375	51773
15	1	Back Panel	112305
16	2	O-ring gasket	113637
17	2	Bolt .312-18 x .75	51670
18	1	Hydraulic Hose to Cylinder 14.5L (Not Shown)	112754
19	1	Hydraulic Hose to Cylinder 18L (Not Shown)	112324

RITE-HITE® STANDARD WARRANTY

RITE-HITE® warrants that its products will be free from defects in design, materials, and workmanship for a period of 365 days from the date of shipment. All claims for breach of this warranty must be made within 30 days after the defect is or can, with reasonable care, be detected and in no event no more than 30 days after the warranty has expired. In order to be entitled to the benefits of this warranty, the products must have been properly installed, maintained, and operated within their rated capacities and/or specified design parameters, and not otherwise abused. Periodic lubrication and adjustment is the sole responsibility of the owner. This warranty is RITE-HITE's® exclusive warranty. RITE-HITE® EXPRESSLY DISCLAIMS ALL IMPLIED WARRANTIES, INCLUDING THE IMPLIED WARRANTIES OF MERCHANTABILITY AND FITNESS. Non-standard warranties, if any, must be specified by RITE-HITE® in writing.

In the event of any defects covered by this warranty, RITE-HITE® will remedy such defects by repairing or replacing any defective equipment or parts, bearing all the costs for parts, labor, and transportation. This shall be the exclusive remedy for all claims whether based on contract, negligence, or strict liability.

LIMITATION OF LIABILITY

RITE-HITE® SHALL NOT IN ANY EVENT BE LIABLE FOR ANY LOSS OF USE OF ANY EQUIPMENT OR INCIDENTAL OR CONSEQUENTIAL DAMAGES OF ANY KIND, WHETHER FOR BREACH OF WARRANTY, NEGLIGENCE, OR STRICT LIABILITY.

National Sales & Service Office:

RITE-HITE®
8900 N. Arbon Drive
P.O. Box 245020
Milwaukee, Wisconsin 53224

Phone: 414-355-2600
1-800-456-0600
www.ritehite.com

Representatives in all Major Cities