OWNER'S MANUAL

STRONGARM™ RVR303 VEHICLE RESTRAINT
WITH BLUE GENIUS™ TOUCH CONTROL

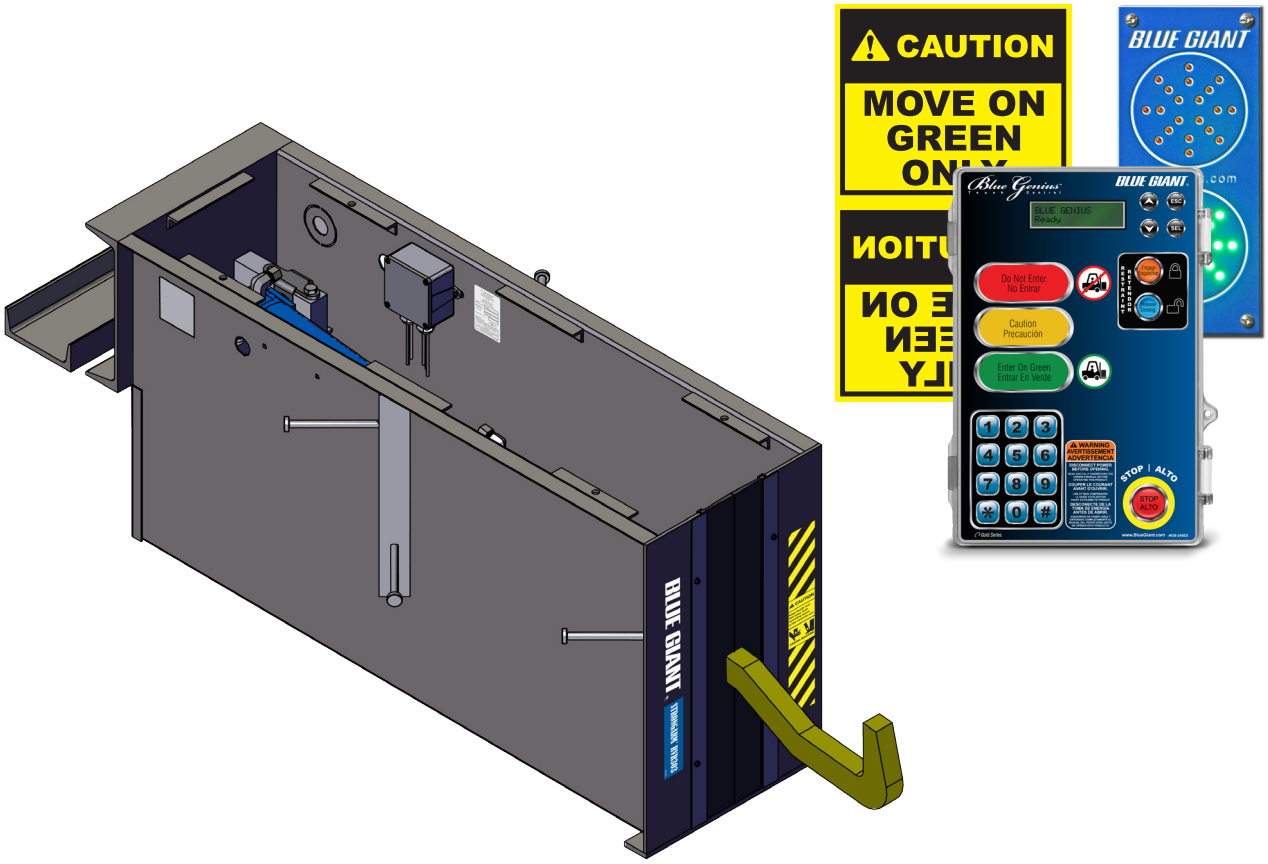

ACTUAL PRODUCT MAY NOT APPEAR EXACTLY AS SHOWN

WARNING

Do not operate or service this product unless you have read and fully understand the entire contents of this manual. Failure to do so may result in property damage, bodily injury or death.

BLUE GIANT®

STARTING FROM OCTOBER 14, 2015 / SERIAL # 406104-01

ISSUE DATE: OCTOBER 14, 2015 REV.0 (PART # 038-953E)

TABLE OF CONTENTS

1.0 **ABOUT THE STRONGARM™ RVR303 WITH BLUE GENIUS™ TOUCH CONTROL** 4
- 1.1 OWNER'S PURCHASE RECORD 4

2.0 **INTRODUCTION** 5
- 2.1 WARRANTY INFORMATION 5
- 2.2 EXCLUSION OF LIABILITY 5
- 2.3 MANUFACTURER'S NOTE 5
- 2.4 OWNER'S RESPONSIBILITY 6

3.0 **OPERATOR'S MANUAL SAFETY MESSAGE COLOR IDENTIFICATION** 7
- 3.1 OPERATIONAL SAFETY WARNINGS 7

4.0 **LOCKOUT / TAGOUT PROCEDURE AND RULES** 8

5.0 **CONTROL PANEL OPERATION** 9
- 5.1 BUTTON FUNCTION 9

6.0 **OPERATING INSTRUCTIONS** 10
- 6.1 FUNCTIONAL DESCRIPTION 10
- 6.2 STOP BUTTON FUNCTION 11
- 6.3 PRIOR TO USE: EQUIPMENT IN STORED POSITION 11
- 6.4 TRAILER AT BAY 12
- 6.5 ENGAGING RESTRAINT 12
- 6.6 DEPLOYING THE DOCK LEVELER 13
- 6.7 RELEASING THE RESTRAINT HOOK 13
- 6.8 ENGAGING THE OVERRIDE FEATURE 14
- 6.9 RELEASING THE OVERRIDE FEATURE 15

7.0 **MAINTENANCE** 16
- 7.1 PLANNED MAINTENANCE PROGRAM (PMP) 16
- 7.2 OPERATOR DAILY INSPECTION 16
- 7.3 ROUTINE SERVICING AND MAINTENANCE 16
- 7.4 PLANNED MAINTENANCE PROGRAM INTERVALS 16
- 7.5 MAINTENANCE SEQUENCE 16
- 7.6 RECOMMENDED HYDRAULIC FLUIDS 16
- 7.7 PMP CHECKLIST - STRONGARM™ RVR303 VEHICLE RESTRAINT 17

8.0 **RECOMMENDED SPARE PARTS** 18
- 8.1 STANDARD OPERATIONAL COMPONENTS 18
- 8.2 COMPONENT SHIELDS 19

9.0 **DECAL IDENTIFICATION AND LOCATION** 20

10.0 **EQUIPMENT COMPONENT ILLUSTRATIONS** 21
- 10.1 COMPONENTS AS SHIPPED CHECK LIST 21
- 10.2 MECHANICAL ASSEMBLY - 1000475 22
- 10.3 GENERAL DIMENSIONS 23
- 10.4 GUIDANCE CHANNEL ASSEMBLY 24
- 10.5 POWERPACK PART IDENTIFICATION 25

TABLE OF CONTENTS CONT'D.

10.6 CONTROLS 26
10.7 RESTRAINT JUNCTION BOX 27
10.8 JUNCTION BOX W/ REMOTE I/O 28
10.8.1 JUNCTION BOX DIMENSIONS 28
10.9 DOCK INTERLOCK SENSOR 29
10.10 EXTERIOR TRAFFIC LIGHT / MIRROR IMAGE SIGN 29
11.0 **OPTIONAL COVER PLATE** 30
12.0 **VEHICLE RESTRAINT TROUBLESHOOTING** 31
13.0 **BLUE GENIUS™ LCD MESSAGES** 35
14.0 **WIRING DIAGRAMS** 35
14.1 WIRING DIAGRAM—115V SINGLE PHASE 36
14.2 WIRING DIAGRAM—230-575V THREE PHASE 37

1.0 ABOUT THE STRONGARM™ RVR303 WITH BLUE GENIUS™ TOUCH CONTROL

The Blue Giant StrongArm™ RVR303 applies 35,000 lb (15,876 kg) of restraining force to prevent trailer creep, unscheduled departures, and other hazards caused by trailer movement. With a vertical restraining envelope of 8" (203 mm) to 30" (762 mm) and a horizontal reach of 14" (381 mm), the RVR303 will secure virtually any truck or trailer, even those with bent or damaged ICC bars (a.k.a. RIG bar or underride guard).

- Blue Giant VersaLock™ technology allows the hook to maintain a snug and secure hold on the ICC bar throughout the entire horizontal operating range of the RVR303.
- A heavy-duty extension spring delivers powerful upward force, enabling constant contact with the ICC bar.
- The hook is stored out of the debris zone, minimizing the risk of accidental impact damage.

The Blue Genius™ Gold Series II Touch Control Panel features an LCD menu screen, touch buttons (Engage, Release, Stop) and a flat-surfaced keypad with unique touch sensors. LED control panel lights and LED exterior traffic lights keep truck drivers and warehouse personnel advised of safety conditions during dock operations.

1.1 OWNER'S PURCHASE RECORD

OWNER'S PURCHASE RECORD Please record information for future inquiries and to validate warranty. (See Section 2.1 for warranty validation)	
Dealer:	**Date in Service:**
	Number of Units:
Serial Number:	**Door #:**
Serial Number:	**Door #:**
Serial Number:	**Door #:**
Serial Number:	**Door #:**
Serial Number:	**Door #:**
Serial Number:	**Door #:**
Serial Number:	**Door #:**

The manufacturer offers a full line of dock levelers, dock safety equipment, accessories, ergonomic and scissor lift equipment, seals and shelters, and industrial trucks. Concurrent with a continuing product improvement program, specifications are subject to change without notice (See Section 2.2 "*Exclusion of Liability*"). Please contact the manufacturer for latest information. Some features illustrated may be optional in certain market areas.

NOTICE
See section 9.0 "*Decal Identification and Location*," item #4 for serial number location.

2.0 INTRODUCTION

The following is a quick reference to important procedures that must be followed while using the Vehicle Restraint System. It is not intended to cover, or suggest that it does cover, all procedures necessary to ensure safe operation. All operators should be aware of and abide by all workplace safety regulations applicable to the operation of the Vehicle Restraint System. These laws and regulations include but are not limited to:

- The Occupational Safety and Health Act
- Canada Occupational Health and Safety Regulations
- Occupational Safety and Health Acts for Individual States (USA)

For additional information on these regulations as well as industry standards that may apply to this product, please contact:

American National Standards Institute (ANSI)
1430 Broadway
New York, NY 10018
Telephone: 212.642.4900
www.ansi.org

Also a member of:

Loading Dock Equipment Manufacturers
A Product Section of Material Handling Industry of America
A Division of Material Handling Industry
8720 Red Oak Blvd, Suite 201
Charlotte, NC, 28217-3992
Telephone: 704.676.1190
www.mhi.org/lodem

2.1 WARRANTY INFORMATION

Thank you for purchasing Blue Giant products. We appreciate your business, and are confident that our product will serve you for many years to come. In the event that you experience a problem with our product, our Warranty Center is here to support the Blue Giant Product(s) that you have purchased.

To validate warranty on recently purchased equipment, please complete and submit your information with our on-line Warranty Registration at **www.BlueGiant.com**.

For more information about Blue Giant Warranty Support, please contact your local Blue Giant Equipment dealer, representative or authorized partner near you. You may also visit www.BlueGiant.com or phone 1.905.457.3900.

DEALER INFORMATION
Name:
Contact:
Telephone:

* **NOTE** that failure to validate warranty at the time of receipt can seriously affect the outcome of any claim.

2.2 EXCLUSION OF LIABILITY

The manufacturer assumes no liability for damage or injury to persons or property which occur as a result of defects or faults in or incorrect use of the Vehicle Restraint System. The manufacturer also assumes no liability for lost profits, operating downtimes, or similar indirect losses incurred by the purchaser. Injury to third parties, irrespective of its nature, is not subject to compensation.

The manufacturer reserves the right to make changes at any time to the modules, components, and accessories, concurrent with its continuing product improvements and development program. Specifications, operating instructions, and illustrations included in this manual are subject to change without notice. Please contact manufacturer for the latest information.

2.3 MANUFACTURER'S NOTE

The Vehicle Restraint has been carefully inspected and tested at the manufacturer's plant prior to shipment, but should be checked upon receipt for transport damage. Any observed transport damage is to be listed on the signed copy of the freight document. Notify the freight forwarder of any damage WITHIN 48 HOURS.

2.4 OWNER'S RESPONSIBILITY

1. The owner should recognize the inherent danger of the interface between the dock and the freight carrier. The owner should, therefore, train and instruct operators in the safe use of the dock equipment and accessories in accordance with the manufacturer's recommendations.

2. The owner should thoroughly familiarize themselves with the following procedures and specifications, and request immediate replacement of all manufacturer-supplied documents that are missing, damaged, or otherwise illegible.

    - Installation instructions
    - Operating instructions
    - Planned maintenance procedures
    - Inspections procedures
    - Replacement parts lists

    Upon receipt of any newly purchased dock equipment, the owner shall verify the presence of owner's manuals, operating placards, and any other documentation necessary for training dock personnel how to use the equipment safely and effectively.

3. Manufacturer's recommended periodic maintenance and inspection procedures shall be followed, and written records of the performance of these procedures should be kept as per warranty guidelines.

4. Dock equipment that is structurally damaged, experiencing performance irregularities, or has been potentially compromised (i.e. sudden loss of support due to premature truck departure) shall be removed from service until a trained and authorized manufacturer's representative can conduct an inspection and perform any necessary repairs.

5. As with any piece of machinery, dock equipment requires routine maintenance, lubrication, and adjustments. Your local Blue Giant representative offers owners the option of a Planned Maintenance Program (P.M.P.). As part of this service, your local Blue Giant® representative will do all routine maintenance, lubrication, and adjustments.

6. The owner shall ensure that all nameplates, caution/instruction markings or labels are in place and legible, and that the appropriate operating/maintenance manuals are provided to authorized users. Replacement name plates, caution/instruction labels, and manuals containing operating and maintenance instructions are available through the Blue Giant Aftermarket Department.

7. Modifications or alterations of dock equipment shall be made only with written permission of the original manufacturer. These changes shall also satisfy all safety recommendations of the original equipment manufacturer for the particular application of the dock equipment.

8. The owner or a trained and authorized representative shall verify that all freight carrier brakes have been applied and a vehicle restraint and/or wheel chocks properly engaged before cross-docking procedures such as loading and unloading begin.

9. Unless specifically agreed to in writing by Blue Giant Equipment Corporation at the time of order (and prior to manufacture), all Blue Giant Dock equipment is sold as a complete offering, and must not be altered or added to in any manner (which includes configuration and function) without written permission from an authorized manufacturer's representative.

10. If, at the request of the owner, Blue Giant does not supply all or some of the dock equipment power unit and/or control panel components, the owner shall assume responsibility for any and all operational and safety issues associated with the resulting configuration.

11. It is the owner's responsibility to replace any damaged or missing decals and to ensure that they are visible at all times.

3.0 SAFETY MESSAGE COLOR IDENTIFICATION

This manual includes color-coded safety messages that clarify instructions and specify areas where potential hazard exists. To prevent the possibility of equipment damage and serious injury or death, please observe strictly the instructions and warnings contained in the messages. If warning decals become damaged or missing, replace them immediately. Avoid accidents by recognizing dangerous procedures or situations before they occur.

DANGER

Serious injury or death will likely occur if the instructions are not followed.

NOTICE

Procedures marked notice must be followed in order to prevent damage to machinery.

WARNING

Serious injury or death may occur if the instructions are not followed.

CAUTION

Instructions marked caution concern safe operating procedure. Failure to comply may result in personal injury.

3.1 OPERATIONAL SAFETY WARNINGS

DANGER

Keep hands and feet away from operating space of the restraint apparatus.

CRUSH HAZARD

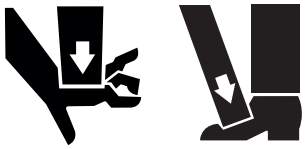

1. Do not operate the dock equipment while anyone is standing in its path.
2. Lift the dock equipment with suitable hoisting equipment only. Do not stand under the dock equipment or any heavy object while it is being hoisted.
3. **BEFORE BEGINNING ANY SERVICE PROCEDURES:** Disconnect the power and follow all lockout / tagout procedures outlined in this manual.

WARNING

1. Installation must be performed only by trained and authorized personnel.
2. Prior to installation, place adequate barriers to prevent vehicle traffic from entering the work area.
3. During installation, anchors must be properly torqued to achieve the necessary anchoring strength. DO NOT USE IMPACT DRIVERS.
4. Any electrical work must be performed by qualified personnel only.
5. Do not remove the wheel chocks until loading /unloading is finished and the truck is cleared for departure or the vehicle restraint has been released and the lights have changed to RED inside and GREEN outside.

NOTICE

1. Do not ground welding equipment to any electrical components.
2. Do not allow the drill to go too deeply into the control box, as damage may occur to the control systems.
3. Never use air to blow debris from the control box. Use a vacuum to perform any necessary cleaning.
4. Do not connect green ground lead into control box or junction box until all welding has been completed.
5. If an extension plate / box is required, securely mount it on the restraint with hardware provided before shimming and drilling.
6. Improper adjustments and / or lubrication may cause operational problems with equipment.
7. Check hydraulic fluid level.
8. Do not force the valve adjustment screws against the internal stops.

CAUTION

1. Only trained personnel should operate or service this equipment.
2. Do not operate the dock equipment until the transport vehicle is parked against the dock bumpers.
3. Always park the dock equipment after use (ensure that the lip is safely parked in the lip keepers).
4. Conduct routine inspections and maintenance. Failure to do so could cause equipment damage and or personal injury.
5. Always call your authorized service representative or manufacturer immediately if a malfunction occurs.
6. Always return the restraint arm to the parked position after use.

4.0 LOCKOUT / TAGOUT PROCEDURE AND RULES

In accordance with the rules and regulations of the Occupational Safety and Health Administration (OSHA), all affected employees must be notified that the machine or equipment will be shut down and locked out to perform repair or maintenance work. The work area must be checked to ensure that all personnel have been removed or safely repositioned. The machine or equipment power supply shall be locked in the OFF position or disconnected from the energy source. Blue Giant strongly recommends that only OSHA-approved lockout devices and procedures be utilized.

The energy isolating device must bear a prominent warning tag indicating that work is being done on the equipment and the name of the authorized employee responsible for the lockout. It is mandatory that tagout notices not be susceptible to deterioration or illegibility due to weather conditions or exposure to chemicals and moisture.

WARNING

Always lockout and tagout any power source before performing any work on any electrical devices or electrical controls according to OSHA regulations and approved local electrical codes.

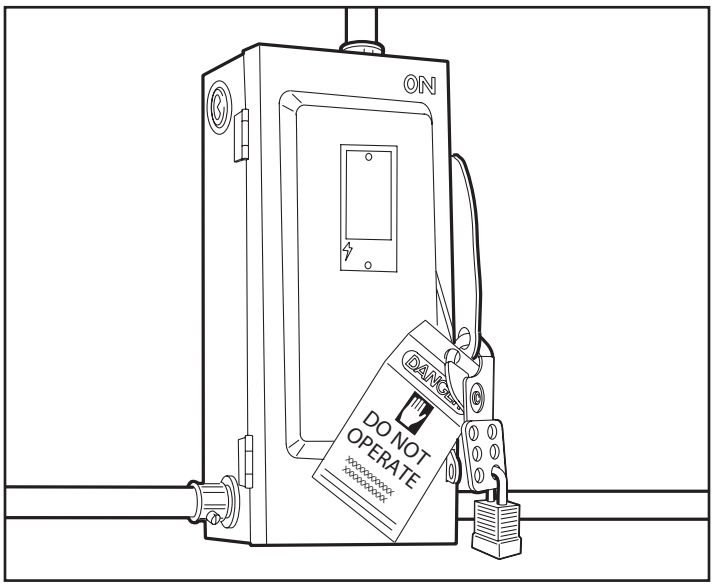

Approved way to lockout / tagout.

5.0 CONTROL PANEL OPERATION

Controls combinations of all supported dock equipment: one individual vehicle restraint, one individual dock leveler, and controls for a door. Also equipped with touch buttons, inside forklift operator traffic lights, operator menu screen, and keypad for coded features.

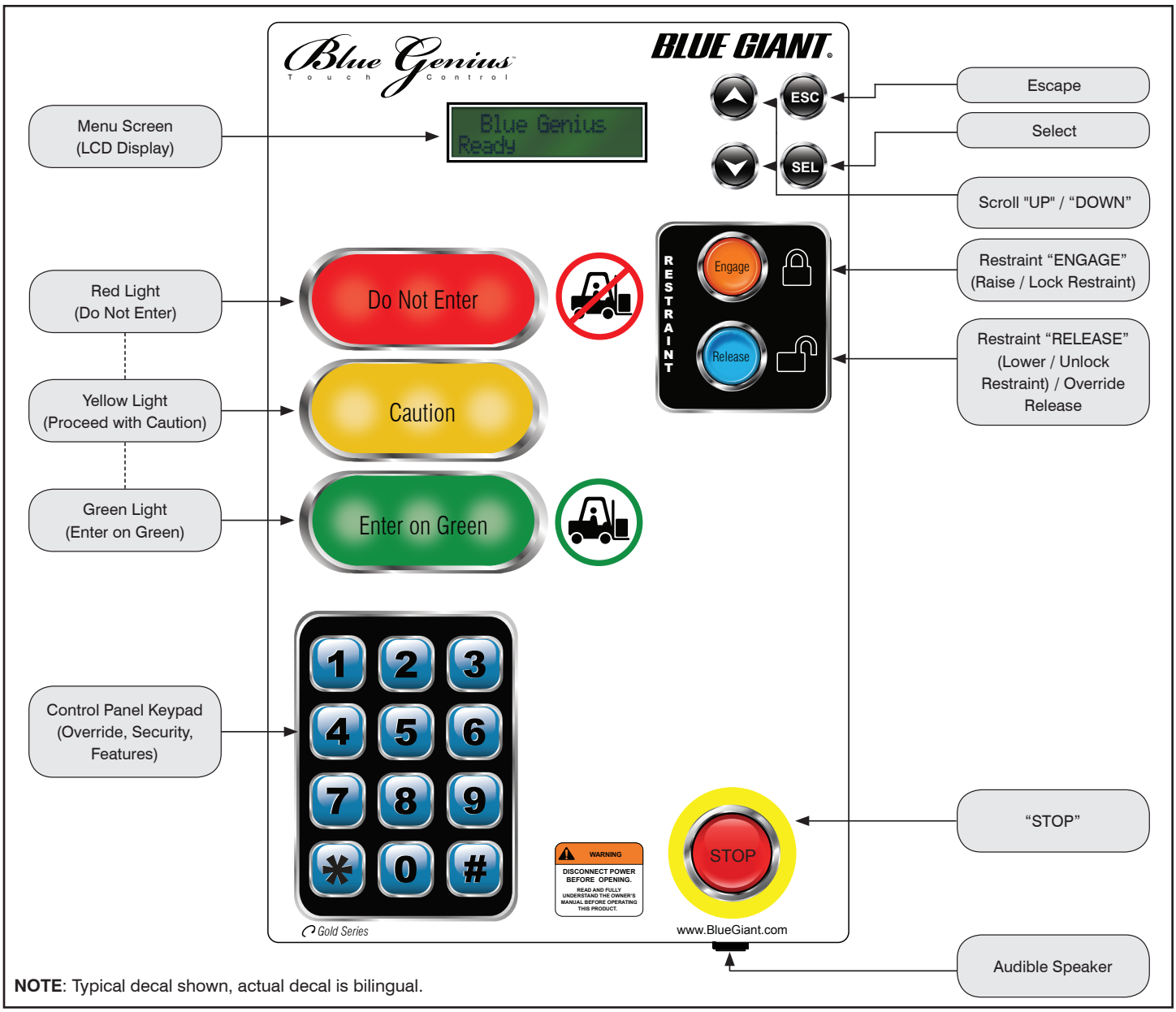

NOTE: Typical decal shown, actual decal is bilingual.

5.1 BUTTON FUNCTION

When touching any of the function buttons or keypad, use the pad of the finger. The control panel's unique touch sensors detect the proximity of the dock operator's finger. Audible touch buttons and keypad on the control panel provide instant sound feedback to user input.

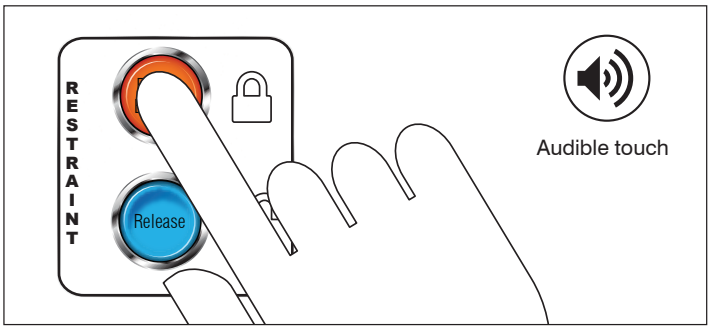

6.0 OPERATING INSTRUCTIONS

WARNING

Do not operate this vehicle restraint unless you have been trained and authorized to do so, and have read and understood all of the safety information and instructions contained in this manual.

Do not operate this restraint until you have checked its condition. Report the need for repairs to your supervisor immediately and do not operate the unit until repairs are made.

Never try to lift or move any part of the vehicle restraint manually. Keep hands and feet clear of vehicle restraint pinch points.

It is the responsibility of the owner / operator of truck / vehicle to (whenever possible) exhaust the air from air-ride suspension systems prior to performing loading or unloading.

Because ICC bars differ in strength and construction, review the need to use wheel chocks in conjunction with the vehicle restraint.

This vehicle restraint is designed for rear impact guards (RIG) and rear impact protection (ICC Bar) that follow the Federal Motor Carrier Safety Administration guidelines (FMCSA section 571.223 and 571.224) + NHTSA (National Highway Traffic Safety Administration) guidelines.

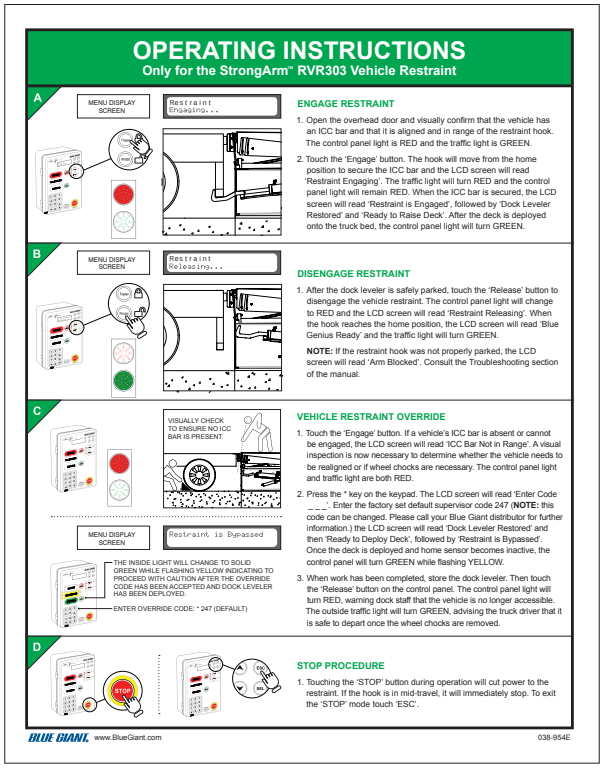

RVR303 operation placard, provided with equipment—part # 038-954E

6.1 FUNCTIONAL DESCRIPTION

The vehicle restraint is used to restrain a trailer at the loading dock. When engaged, it secures a vehicle's ICC bar, restricting forward movement caused by vehicle creep or unscheduled departure. It is electric-hydraulic operated and monitored via the Blue Genius™ Touch Control Panel, and comes standard with an automatic lights communication package consisting of red/yellow/green control panel lights and exterior red/green LED traffic lights.

EXTERIOR TRAFFIC LIGHT

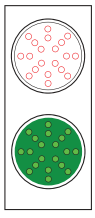

Exterior red / green traffic lights advise the truck driver when it is safe to depart.

INSIDE COMMUNICATION LIGHTS & CONTROL PANEL

Red / yellow / green control panel lights keep forklift operators and warehouse personnel advised of safety conditions at the loading dock.

Common Terms:

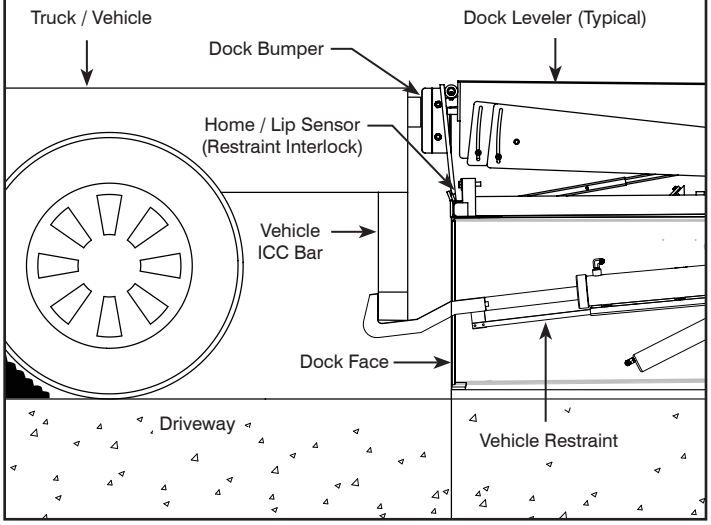

ADVANCED SAFETY FEATURES

6.2 STOP BUTTON FUNCTION

Should an unexpected interference occur or potentially dangerous situation arise, the Blue Genius™ control panel has a temporary 'STOP' button. Touching the 'STOP' button during operation will cause the unit to stop in mid motion and the internal alarm will beep until the stop function is exited. The control panel light will flash RED and the exterior traffic light will be RED. To exit the 'STOP' mode touch the 'ESC' button.

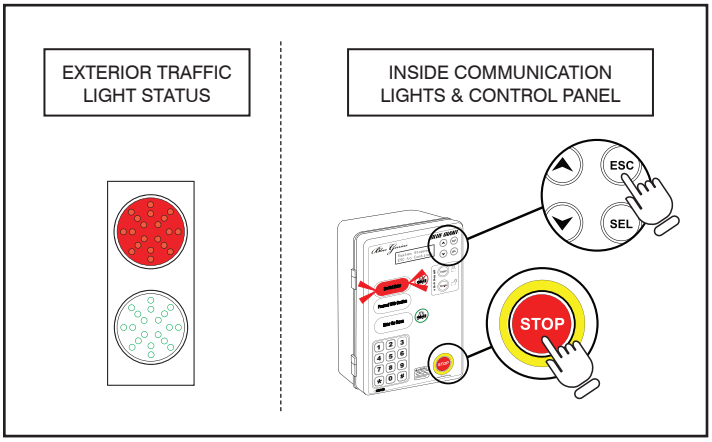

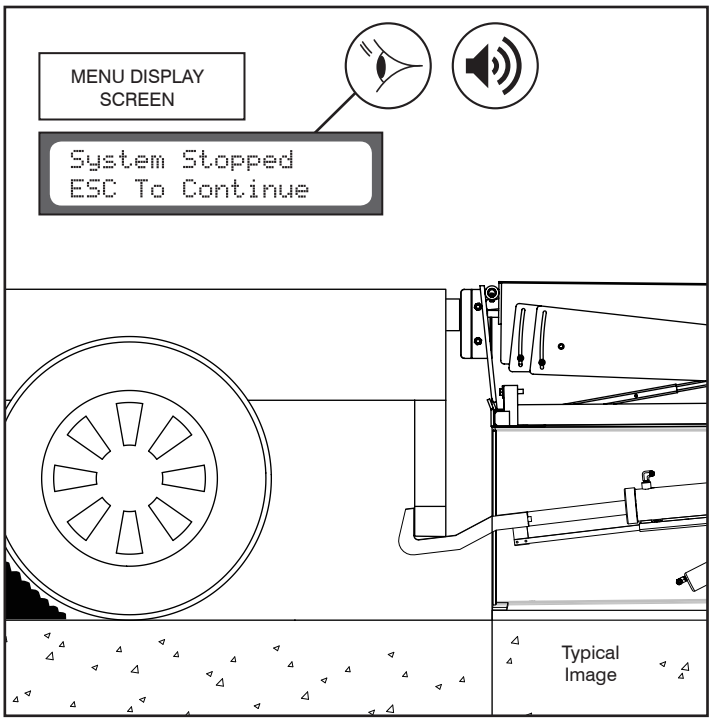

STANDARD OPERATION PROCEDURES

6.3 PRIOR TO USE: EQUIPMENT IN STORED POSITION

The Blue Genius™ control panel is powered on and ready for use. The restraint apparatus is in the home position and the dock leveler lip is parked safely in the lip keepers. The exterior traffic light is GREEN and the control panel light is RED.

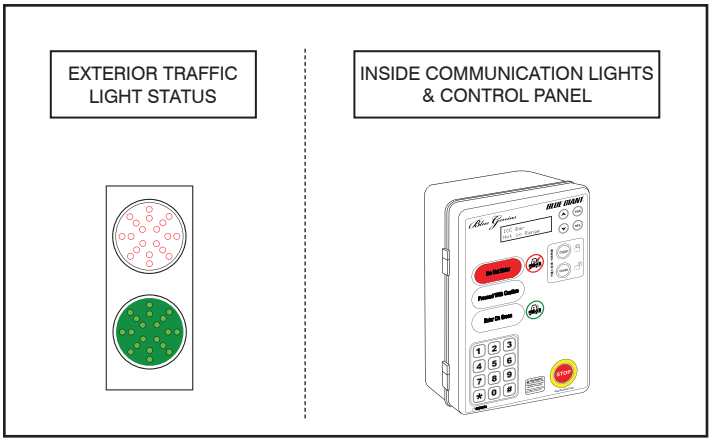

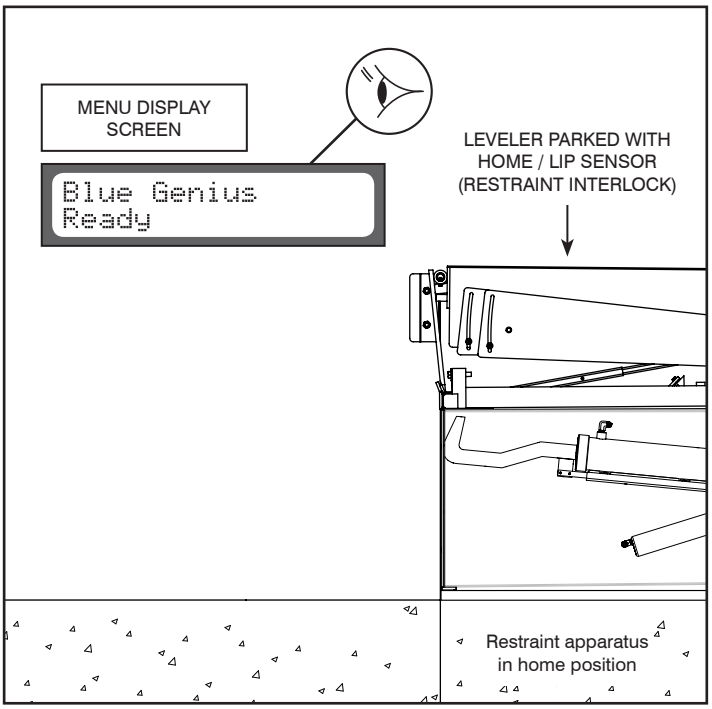

6.4 TRAILER AT BAY

The truck reverses into position against the dock leveler bumpers. The exterior traffic light is GREEN and the control panel light is RED.

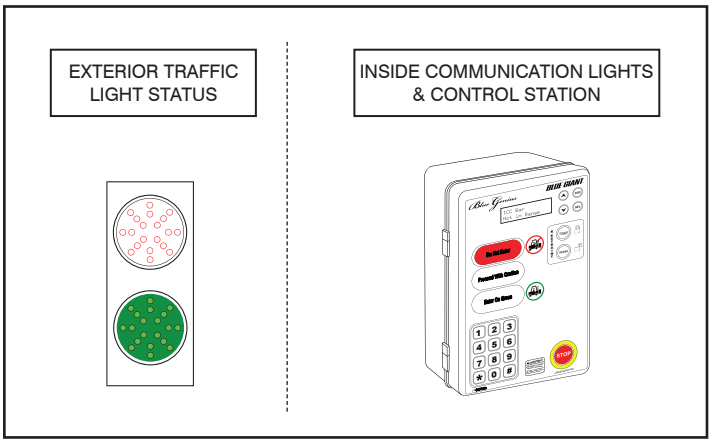

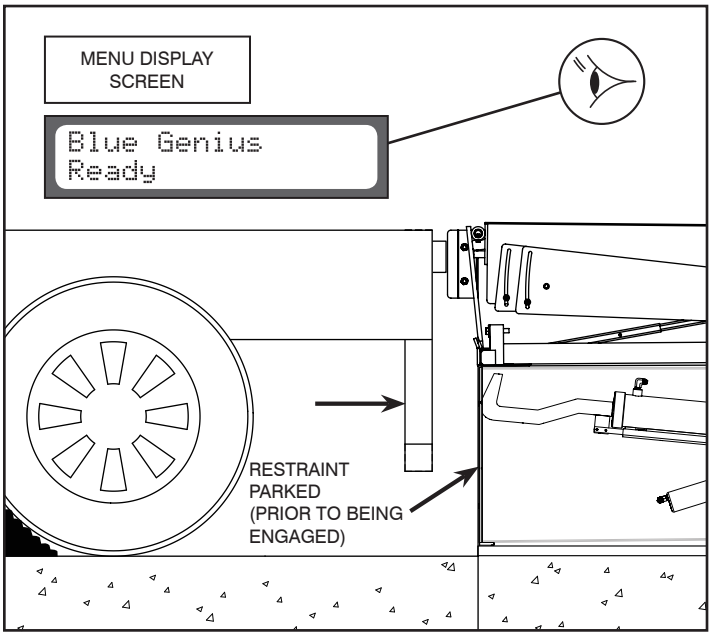

⚠ WARNING

The restraint hook is in motion during the engage and release process.
Please ensure that the personnel and objects remain clear of the motion path when the restraint hook is travelling.

6.5 ENGAGING RESTRAINT

Touch the 'Engage' button on the control panel. The securing apparatus will exit the stored position to secure the truck's ICC bar. The LCD screen will read 'Engaging'. The traffic light will turn RED and the control panel light will remain RED. When the ICC bar is secured, the LCD screen will read 'Restraint is Engaged', followed by 'Dock Leveler Restored' and 'Ready to Raise Deck'. The exterior traffic light remains RED, warning the truck driver to stay in place.

NOTE: For vehicles without an ICC bar, or if the restraint apparatus cannot successfully engage, see Section 6.8 "*Engaging the Override Feature*" for instructions.

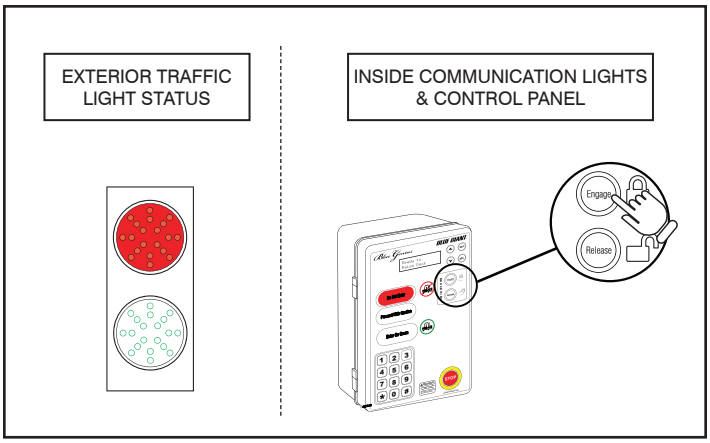

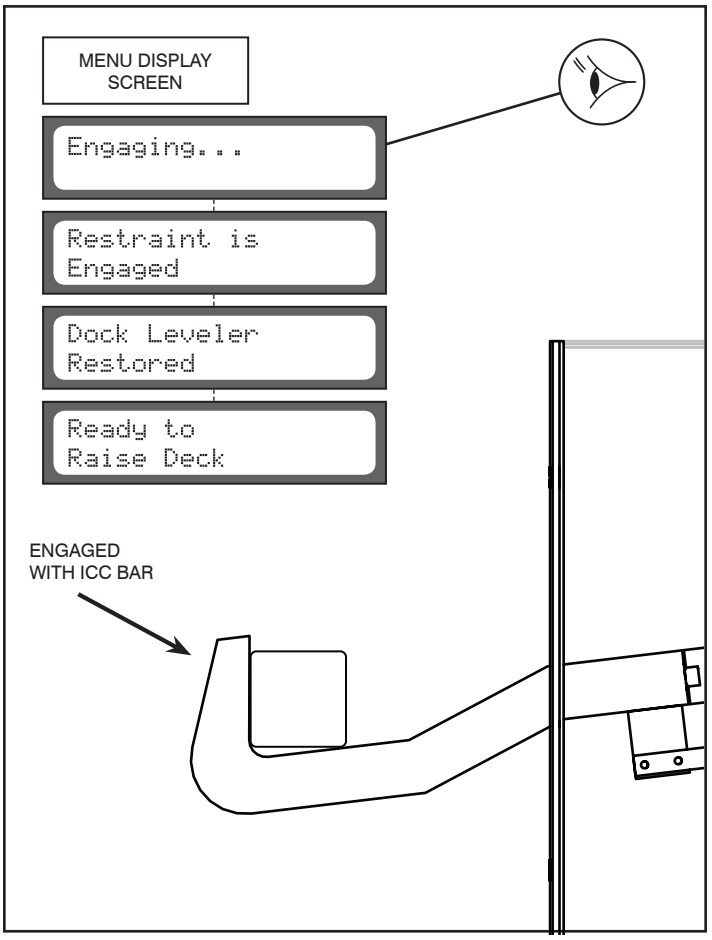

6.6 DEPLOYING THE DOCK LEVELER

Deploy the dock leveler (supplied by others) using controls provided by original manufacturer. Both the exterior traffic light and the control station light will be RED. Touch and hold the 'Deck' button. The LCD screen will read 'Deck Raising'. Keep holding the button until the lip deploys, and then release. The LCD message will change to 'Deck Moving'. The dock leveler and deployed lip will descend onto the truck bed and the message will now read 'Deck Deployed'. The control panel light will turn GREEN.

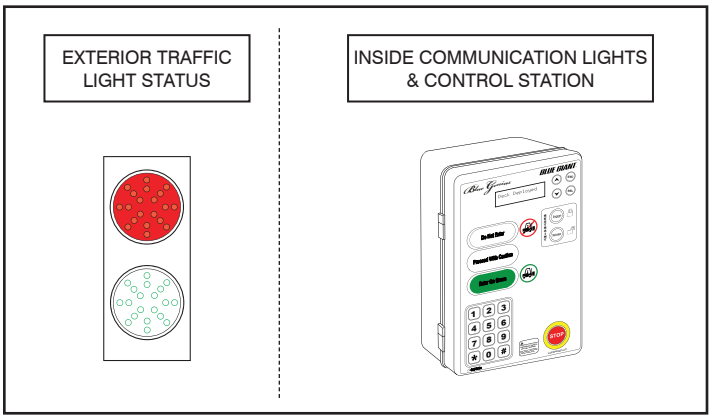

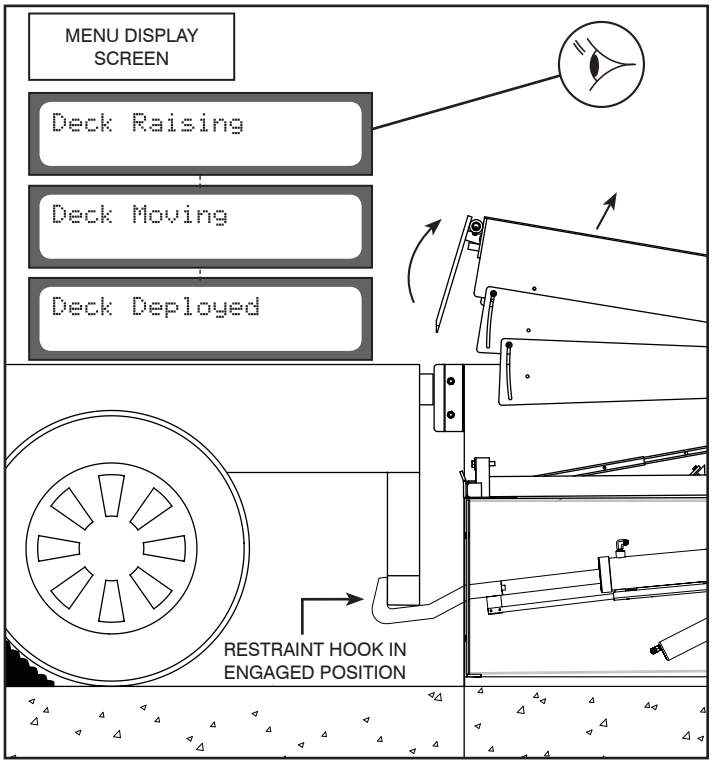

PERFORM LOADING AND UNLOADING

6.7 RELEASING THE RESTRAINT HOOK

After the dock leveler is safely parked, touch the 'Release' button to disengage the vehicle restraint. The control station light will change to RED and the LCD screen will read 'Restraint Releasing'. When the securing apparatus reaches the home position, the LCD screen will read 'Blue Genius Ready' and the traffic light will turn GREEN.

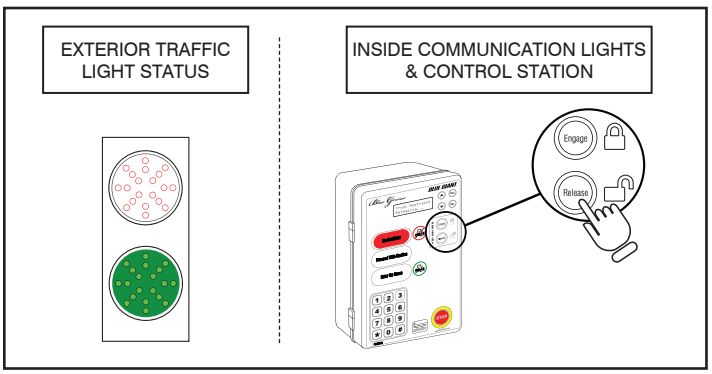

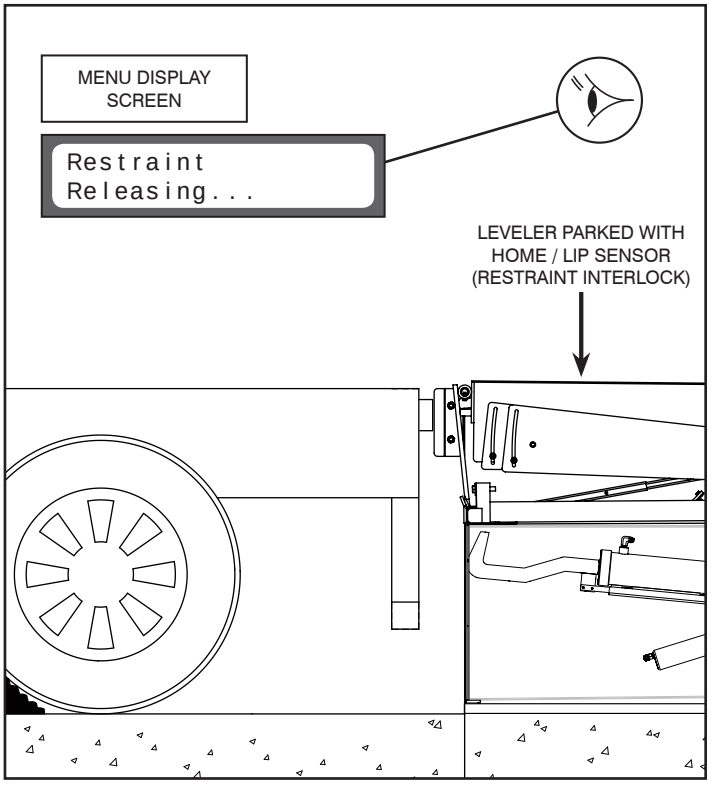

6.8 ENGAGING THE OVERRIDE FEATURE

Should it be necessary to bypass the vehicle restraint function (i.e. the truck has an outdated, damaged, or missing ICC bar), a system-approved override code may be entered via the Blue Genius™ touch keypad. This code can be used whether or not the dock leveler is interlocked with the Blue Genius.™ Ensure that the vehicle is manually chocked before loading and unloading begins.

NOTE: If a visual inspection confirms that the ICC bar is missing or too damaged to be secured, bypass Step 1 in the instructions below and go directly to Step 2, which explains how to enter the Override Code.

1. During "Engaging the Vehicle Restraint", the LCD screen may read "ICC Bar Not in Range." This message indicates that a vehicle's ICC bar is absent or cannot be engaged.

   Determine whether the vehicle needs to be realigned or if wheel chocks are necessary.

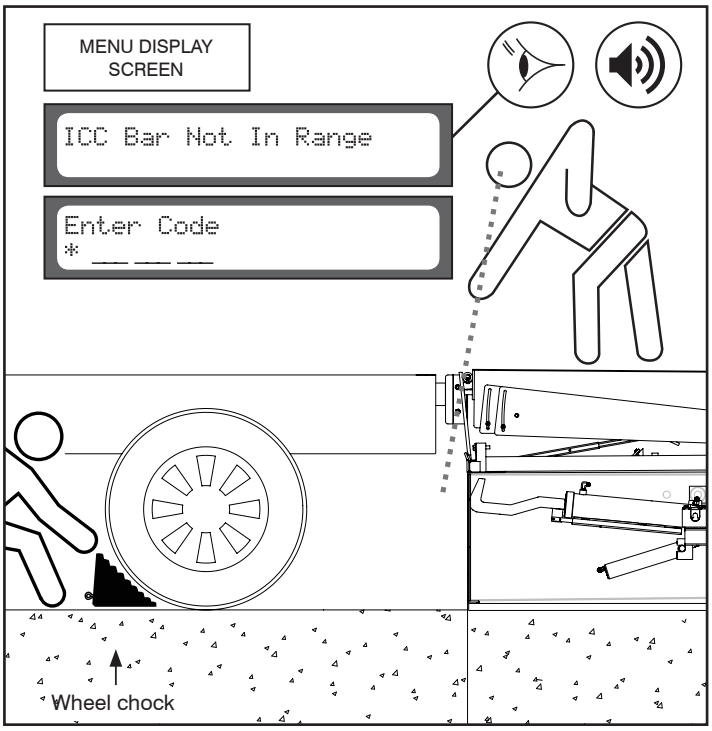

2A. Press the * key on the keypad. The LCD screen will read 'Enter Code *_ _ _'.

   Enter the supervisor code (default factory set code is '247').

   NOTE: The default code can be changed. Please call your Blue Giant representative for further information.

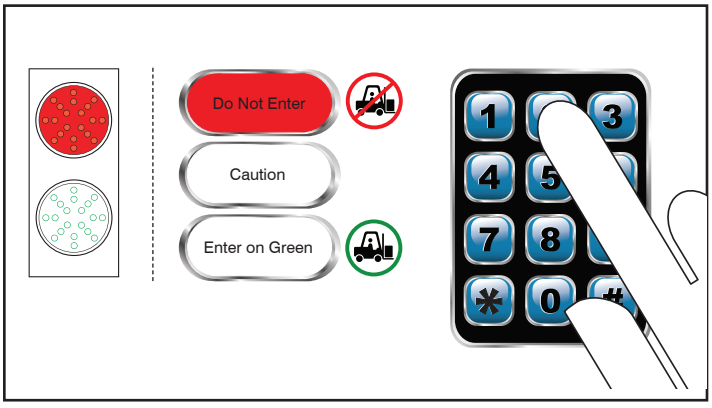

6.8 ENGAGING THE OVERRIDE FEATURE CONT'D.

Continue operation of overhead door, dock leveler, and vehicle restraint as outlined in Section 6.5 the following indicators will appear:

2B. The LCD screen will read 'Dock Leveler Restored' and then "Ready to Deploy Deck," followed by "Restraint Is Bypassed."

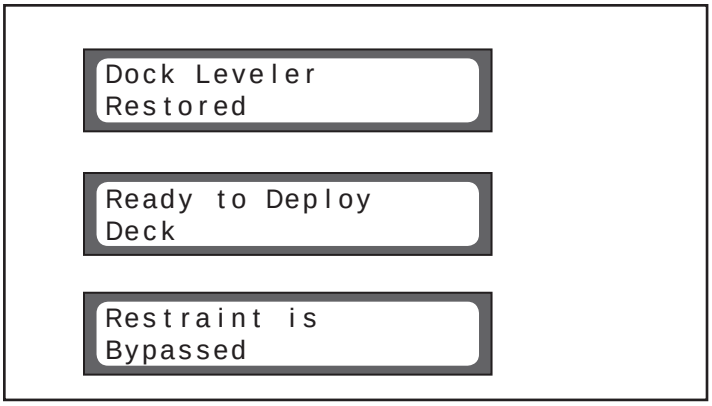

2C. Once the deck is deployed and the home sensor becomes inactive, the control panel light will turn GREEN while flashing YELLOW. This indicates that the vehicle restraint is not engaged.

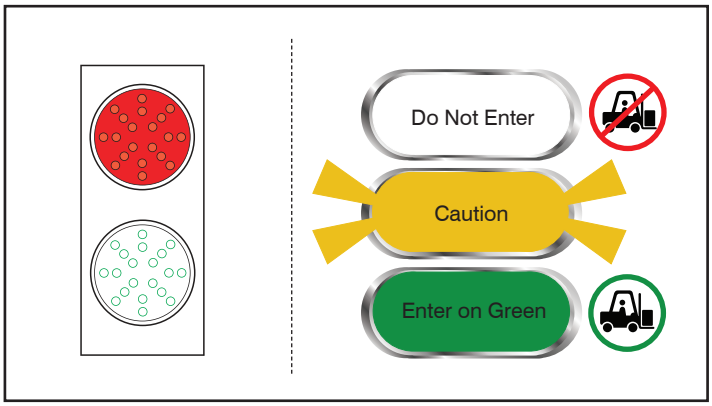

6.9 RELEASING THE OVERRIDE FEATURE

1. Store the dock leveler. (**NOTE:** Override is still active when dock leveler and vehicle restraint are in the parked position). The control panel light will turn RED.

   Touch the 'Release' button on the control panel to release the override. The control panel will verify that the vehicle restraint has been lowered to the home position. The LCD screen will read "Blue Genius Ready."

   The exterior traffic light will turn GREEN, advising the truck driver that it is safe to depart once the wheel chocks are removed.

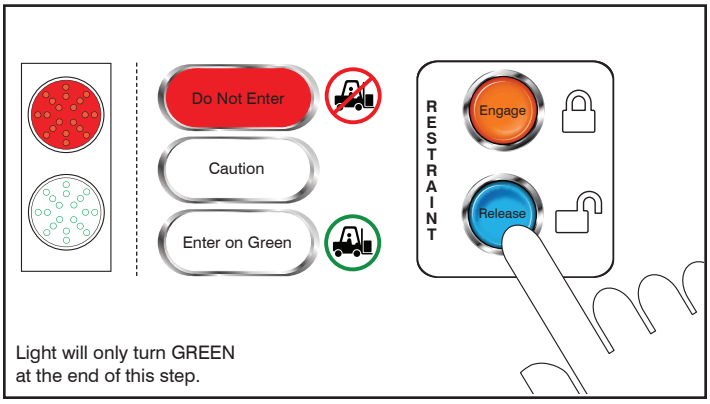

7.0 MAINTENANCE

WARNING

Do not operate and/or service this vehicle restraint until you have read and understood all of the safety information and instructions contained herein and on the vehicle restraint.

Do not work under or around the vehicle restraint without first placing adequate barriers to positively prevent vehicle traffic from entering the work area.

Follow proper lock-out/tag-out procedures.

Keep hands and feet clear of vehicle restraint pinch points and wear appropriate safety attire – glasses, gloves and work boots.

7.1 PLANNED MAINTENANCE PROGRAM (PMP)

In addition to the daily operator inspection, the manufacturer recommends (and local government regulations may require) that a planned maintenance program (PMP) and safety inspection program be performed by a trained and authorized service technician on a regular basis to maintain the equipment is in safe operating condition. The PMP will provide an opportunity to make a thorough inspection of the safety and operating condition of the dock leveler. Necessary adjustments and repairs can be done during the PMP, which will increase the life of components and reduce unscheduled downtime.

Recommended procedures for a periodic planned maintenance program that covers inspections, operational checks, cleaning, lubrication, and minor adjustments are outlined in this manual.

An authorized dealer or distributor is prepared to assist with a planned maintenance program by offering trained service personnel with expertise in dock leveler maintenance requirements.

7.2 OPERATOR DAILY INSPECTION

The vehicle restraint should always be examined by the operator PRIOR TO ANY USE to verify that it is safe to operate.

The manufacturer recommends making multiple photocopies of the PMP Checklist (See Section 7.7 "*PMP Checklist - StrongArm™ RVR303 Vehicle Restraint"*). The operator should fill out this form to keep a daily record of operation and maintenance issues.

7.3 ROUTINE SERVICING AND MAINTENANCE

Regular maintenance and care of the vehicle restraint is very important for cost, operation efficiency, and operator safety. A faulty vehicle restraint is a potential source of danger to the operator, and to other personnel working near it. As with all quality equipment, keep the vehicle restraint in good operating condition by following the recommended schedule of maintenance.

Failure to properly maintain or operate the dock leveler within its rated capacity can void the manufacturer warranty.

7.4 PLANNED MAINTENANCE PROGRAM INTERVALS

Arrange for a qualified vehicle restraint repair technician to perform regularly scheduled planned maintenance on your vehicle restraint every three months for single shift operations or monthly for multi-shift operations. Call your authorized manufacturer/ dealer for further details.

7.5 MAINTENANCE SEQUENCE

1. Cleaning, including pit area
2. Visual inspection of all components
3. Lubrication, as required (by a trained service technician only)
4. Test operate all functions
5. Adjustments, if required (by a trained service technician only)
6. Check for missing or damaged dock bumpers
7. Record inspection details and findings for owners' files

7.6 RECOMMENDED HYDRAULIC FLUIDS

The unit is shipped with Petro-Canada Hydrex MV22 hydraulic oil unless otherwise optioned.

Normal, All Season Weather Conditions:
Valvoline All Weather 36 or equivalent.

NOTE: Dextron II Automatic Transmission Fluid may be used if other suitable oils are not available.

Extreme Low Temperature Conditions:
Esso Univis N15 or Gulf Harmony Arctic 15 or suitable equivalent.

Biodegradable: Esso Univis Bio 40 or suitable equivalent.

7.7 PMP CHECKLIST - STRONGARM™ RVR303 VEHICLE RESTRAINT

DANGER

When repairing or conducting maintenance procedures on electrical components, perform lockout / tagout steps according to OSHA regulations and approved electrical codes.

DANGER

Prior to installation, place adequate barriers to prevent unauthorized personnel and vehicle traffic from entering the work area.

WARNING

All repairs and maintenance work are to be conducted by trained and authorized personnel ONLY.

INSPECTED BY: _____ **DATE:** _____

SERIAL #: _____ **DOOR #:** _____

Forward this checklist to the person responsible for dock equipment maintenance. See Section 1.1 "*Owner's Purchase Record*" for Date in Service.

INSTRUCTIONS FOR USE: Indicate "OK for USE" with a check mark ✔ in the appropriate box of each inspection point.

EVERY DAY:

- ☐ Remove any debris that may have accumulated around the dock equipment
- ☐ Check RVR303 brush seal for wear or damage
- ☐ Check dock bumpers/extensions, wall cracks
- ☐ Check exterior signage (if equipped)
- ☐ Check hydraulic hoses for leaks and/or damage
- ☐ Check safety warning decals and replace if necessary
- ☐ Verify complication-free operation of the Blue Genius™ Control Panel
- ☐ Verify complication-free operation of the dock equipment and the interior and exterior lights system (if installed)

EVERY 90 DAYS (30 DAYS FOR MULTI-SHIFT OPERATIONS)

- ☐ Perform all "every day" tasks
- ☐ Lubricate RVR303 pivot points
- ☐ Check powerpack connections, motor and valves
- ☐ Inspect for damaged or missing parts, rust, corrosion, bent parts, cracks, etc.

EVERY 90 DAYS CONT'D.

- ☐ Check junction box and control station for proper and secure mounting. Verify that all electrical connections are firm.
- ☐ Check hydraulic oil level in powerpack
- ☐ Inspect RVR303 pit (flashlight recommended)

ONCE A YEAR

- ☐ Drain, flush, and change the hydraulic reservoir as site / oil type dictate
- ☐ Verify tilt adjustment
- ☐ Confirm hydraulic hose connections, wear and damage of hydraulic hoses.

PHOTOCOPY THIS CHECKLIST AND FILL OUT REGULARLY FOR YOUR RECORDS.

Explain faults briefly in the space provided below:

_____

_____

_____

8.0 RECOMMENDED SPARE PARTS

8.1 STANDARD OPERATIONAL COMPONENTS

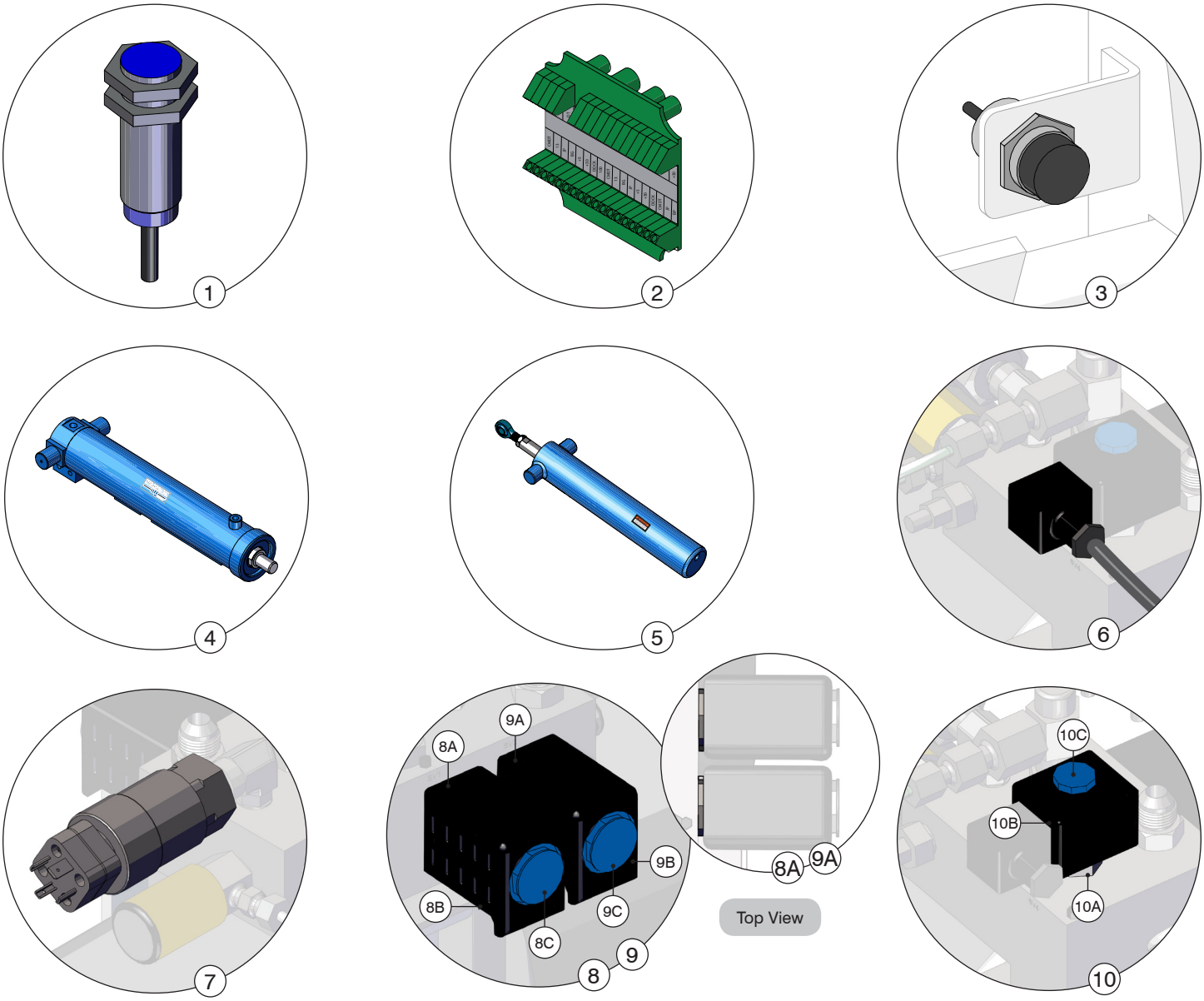

RSP FOR RVR303 – STD OPERATIONAL COMPONENTS

ITEM NO.	PART NO.	DESCRIPTION	QTY. REQ'D
1	028-200	Proximity Sensor (18mm Shielded) 10-30V	1
2	026-G025	Remote I/O Board	1
3	028-206	Proximity Sensor (30mm Unshield): Home / Lip Sensor with 5m Cable	1
4	1000450-KIT	Hook Cylinder Kit	1
5	1000474-KIT	Tilt Cylinder Kit	1
6	026-G074	Cap and Cable	1
7	080-535	Pressure Switch	1

RSP FOR RVR303 – STD OPERATIONAL COMPONENTS

ITEM NO.	PART NO.	DESCRIPTION		QTY. REQ'D
8	080-K004	SV1 Kit	8A: 080-528 - Dir. Valve	1
			8B: 080-531 - 24VDC Coil	
			8C: 033-508-1N Nut	
9	080-K005	SV2 Kit	9A: 080-529 - Dir. Valve	1
			9B: 080-531 - 24VDC Coil	
			9C: 033-508-1N Nut	
10	080-K006	SV3 Kit	10A: 080-530 - Valve	1
			10B: 080-532 - 24VDC Coil	
			10C: 033-508-1N Nut	

8.0 RECOMMENDED SPARE PARTS CONT'D.

8.1 STANDARD OPERATIONAL COMPONENTS CONT'D.

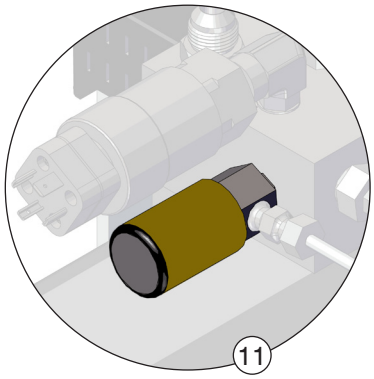

RSP FOR RVR303 – STD OPERATIONAL COMPONENTS			
ITEM NO.	PART NO.	DESCRIPTION	QTY. REQ'D
11	080-533	Regen Valve	1

8.2 COMPONENT SHIELDS

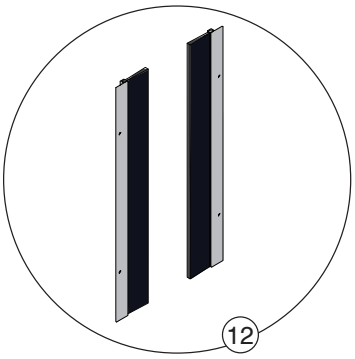

RSP FOR RVR303 – COMPONENT SHIELDS			
ITEM NO.	PART NO.	DESCRIPTION	QTY. REQ'D
12	100173	Retainer Assembly	2

9.0 DECAL IDENTIFICATION AND LOCATION

1

2

5

3

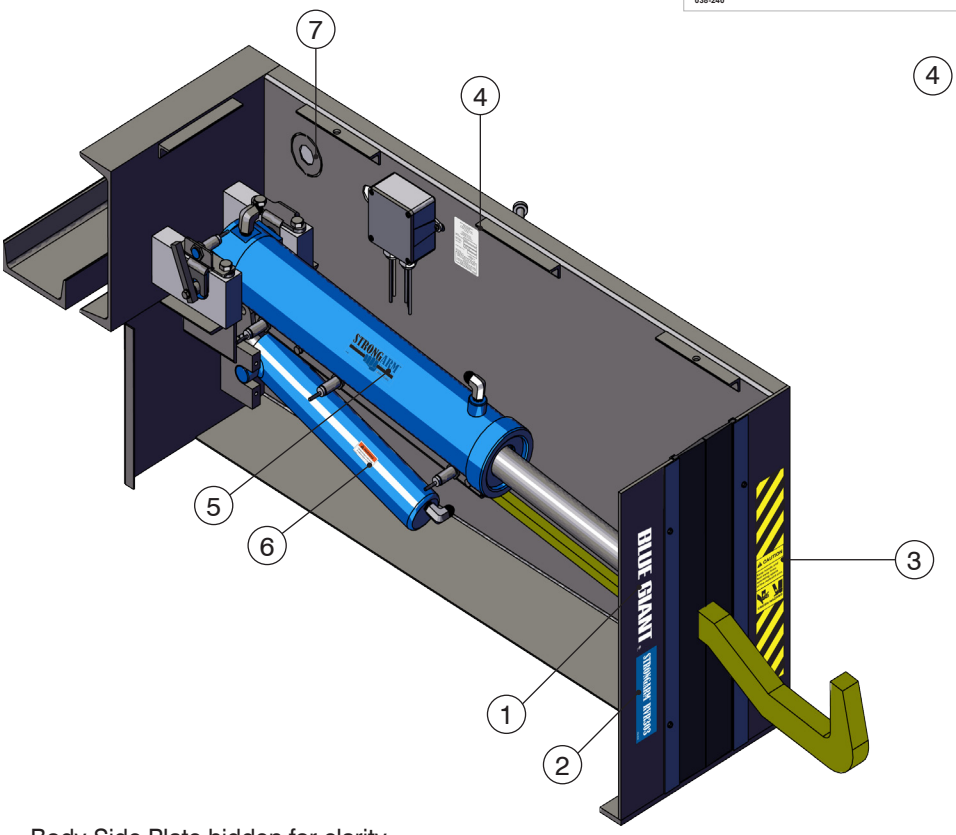

Body Side Plate hidden for clarity

4

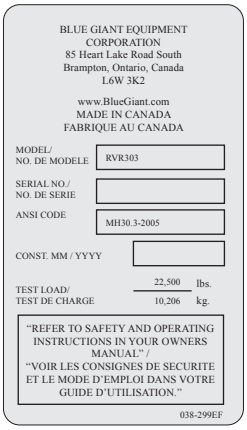

6

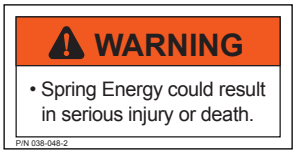

7

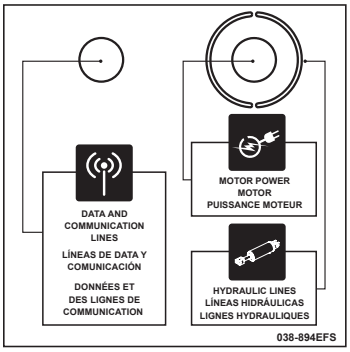

ITEM #	QTY.	PART NO.	DESCRIPTION
1	1	038-219	Decal - Blue Giant
2	1	038-952E	Decal - StrongArm™ RVR303
3	1	038-956E	Decal - Crush Hazard RVR303*
4	1	038-299EF	Decal - Serial Plate*
5	1	038-240	Decal - StrongArm™ Vehicle Restraint
6	1	038-048-2	Decal - Warning Spring Energy*
7	2	038-894EFS	Decal - Conduit Installation

* See Section 2.4 "Owner's Responsibility" regarding decal updates.

10.0 EQUIPMENT COMPONENT ILLUSTRATIONS

10.1 COMPONENTS AS SHIPPED CHECKLIST

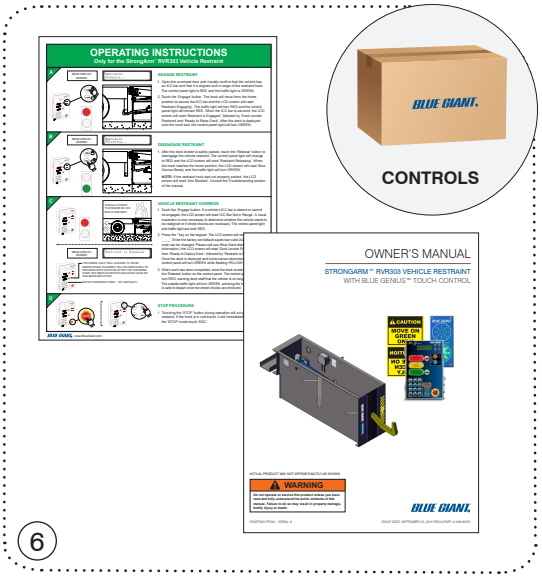

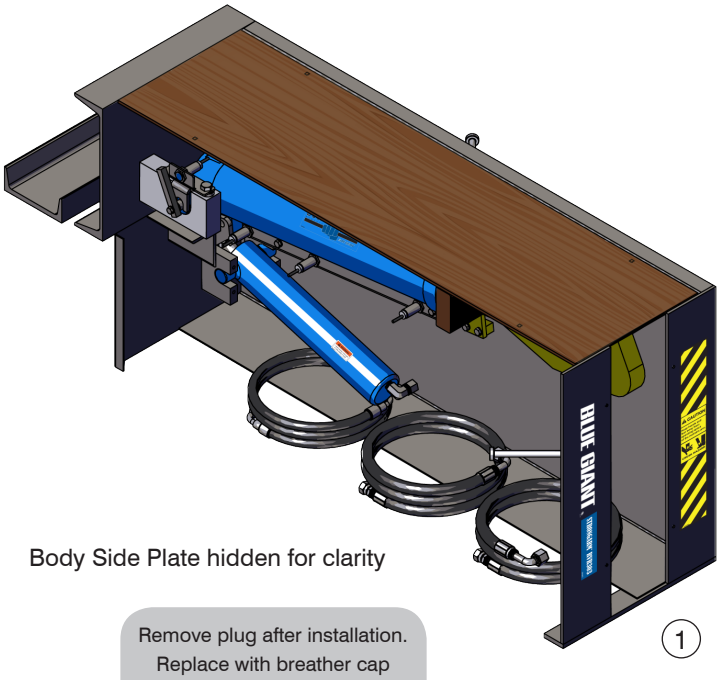

Body Side Plate hidden for clarity

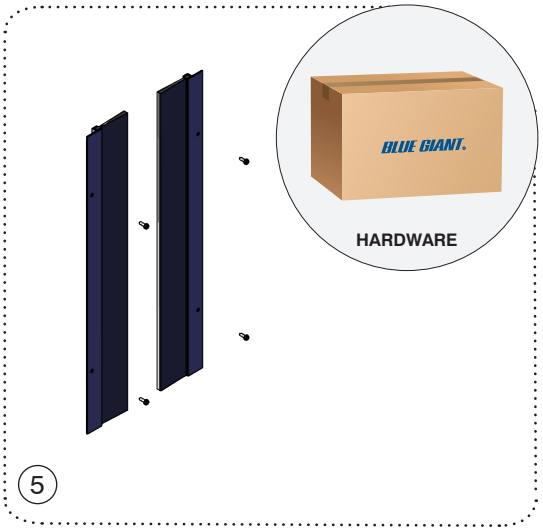

Remove plug after installation. Replace with breather cap (See Sec.11.5 for more details).

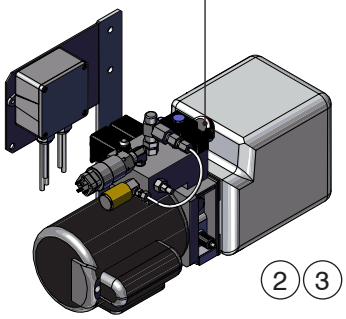

✓	ITEM	QTY	PART NO.		DESCRIPTION	APPROX. WEIGHT	
	1	1	1000475		RVR303 Assembly	350 lb	158.8 kg
	2	1	1002880 -_		Powerpack (See Section 11.5 for Voltages)	90.9 lb	41.2 kg
	3	1	038-538		Breather Cap with Dipstick	< .5 lb	< .22 kg
	4	1	038-225	E F S	Exterior Driver Warning Sign (English / French / Spanish)	0.7 lb	0.32 kg

ITEM # 5 - HARDWARE INCLUDED:

✓	QTY	PART NO.	DESCRIPTION	APPROX. WEIGHT	
	2	1001730	Retainer Assembly	1 lb	.45 kg

ITEM # 6 - CONTROL AND COMPONENTS INCLUDED:

✓	QTY	PART NO.	DESCRIPTION	APPROX. WEIGHT	
	1	BGG0S_F See Sec. 10.6	Complete Control Assembly English / French	6.2 lb	2.81 kg
		BGG0S_S See Sec. 10.6	Complete Control Assembly English / Spanish		
	1	038-954E	Operation Placard	—	—
		038-953E	RVR303 Owner's Manual	—	—
	1	032-461	Exterior Traffic Light	1.3 lb	0.6 kg
		Dock Interlock:			
	1	028-206	Lip Sensor	0.4 lb	0.18 kg
	1	21-002154	Mounting Bracket		

10.2 MECHANICAL ASSEMBLY - 1000475

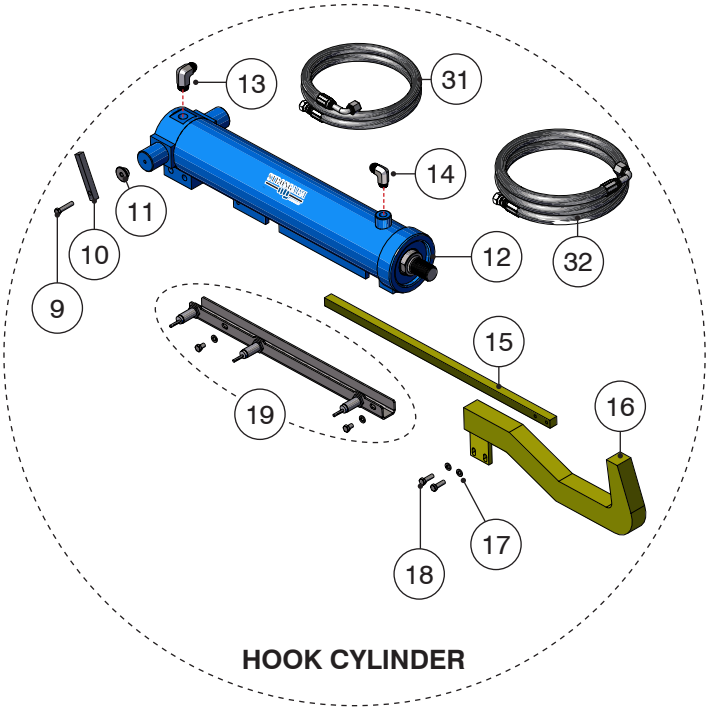

HOOK CYLINDER

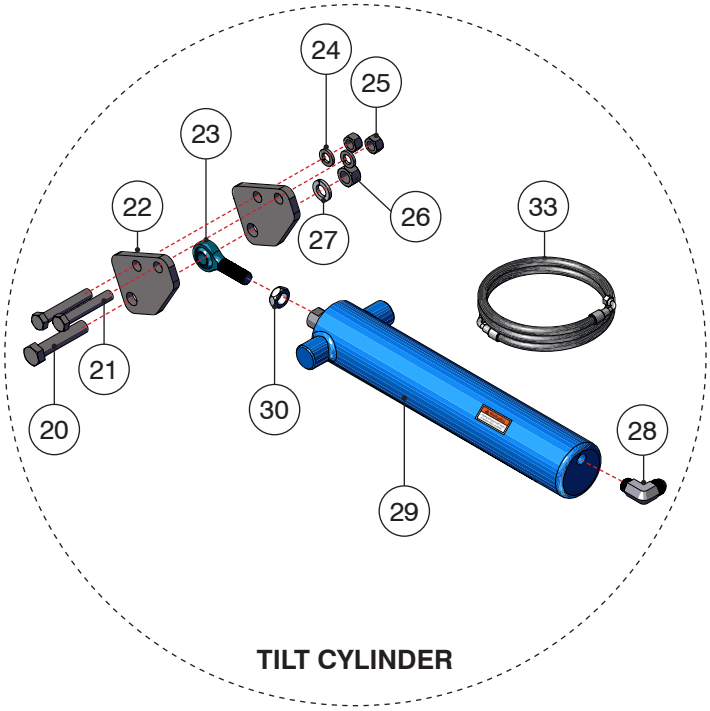

TILT CYLINDER

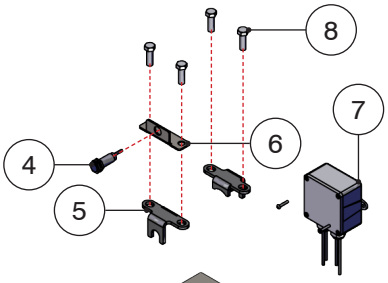

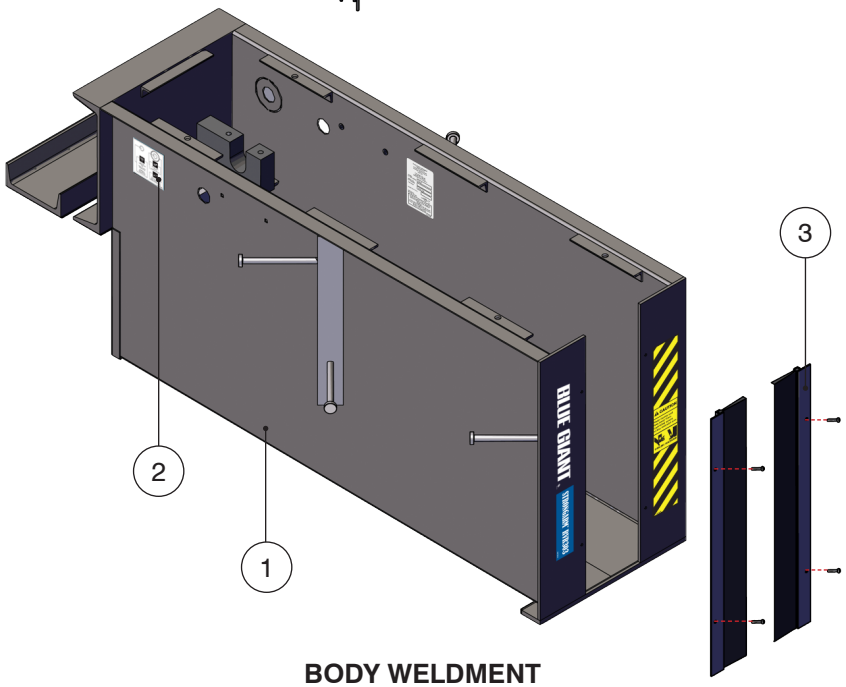

BODY WELDMENT

10.2 MECHANICAL ASSEMBLY CONT'D.

ITEM	QTY.	PART NO.	DESCRIPTION
1	1	54-010979	RVR303 Body Weldment
2	2	038-894EFS	Decal, Conduit Details
3	2	1001730	Retainer Assembly
4	1	028-200	Proximity Sensor 10-30V
5	2	1000484	Cylinder Holding Plate
6	1	1000487	Tilt Sensor Bracket
7	1	025-G020-2	Junction Box
8	4	010-048	Cap Screw 1/2-13 UNC 1-1/2
9	1	010-007	Cap Screw 5/16-18 x 1 HH GR. 5 ZC
10	1	1000456	Tilt Antenna
11	1	1000454	Antenna Spacer
12	1	1000450	Hook Cylinder
13	1	034-541	Elbow SAE# 8 x 1/2 NPT Male
14	1	034-500	Elbow SAE# 8 x 3/8 NPT Male
15	1	1000457	Guidance Bar

ITEM	QTY.	PART NO.	DESCRIPTION
16	1	1000459	Hook, Recessed Restraint
17	2	012-200	Spring Washer 5/16
18	2	010-006	Cap Screw 5/16-18 x 1 HH GR. 5 ZC
19	1	1000485	Guidance Channel Assembly - See Section 10.4
20	1	010-101	5/8"-11 UNC x 3" HH Bolt GR. 5 Plated
21	2	010-028	Cap Screw 1/2"-13 UNC x 3
22	2	1000453	Tilt Bracket
23	1	018-606	Ball Joint Rod End 5/8"-18 UNF - 5/88 Ball ID
24	2	012-220	Lock Washer 0.5
25	2	011-508	Hex Nut 1/2-13
26	1	011-509	Hex Nut 5/8-11
27	1	012-221	Washer 5/8
28	1	034-540	SAE# 6 x 3/8 NPT Male
29	1	1000501	Tilt Cylinder
30	1	011-521	Hex Jam Nut 5/8"-18 UNF

	HOSE ASSY. - #8 HIGH PRESSURE		RUN TO PIT - 5' (1.5m)		RUN TO POST - 9' (2.7m)		RUN TO WALL - 17' (5.2m)	
ITEM	DESCRIPTION		PART NO.	ACTUAL SIZE	PART NO.	ACTUAL SIZE	PART NO.	ACTUAL SIZE
31	Hook	Extend	300-5007-1	6' (1.8m)	300-5007-7	14" (4.3m)	300-5007-9	22' (6.7m)
32		Retract	300-5007-3	8' (2.4m)	300-5007-8	16" (4.9m)	300-5007-10	24' (7.3m)
	HOSE ASSY. - #6 HIGH PRESSURE							
33	Tilt	Raise	100-5018-3	8' (2.4m)	100-5018-4	16" (4.9m)	100-5018-5	24' (7.3m)

10.3 GENERAL DIMENSIONS

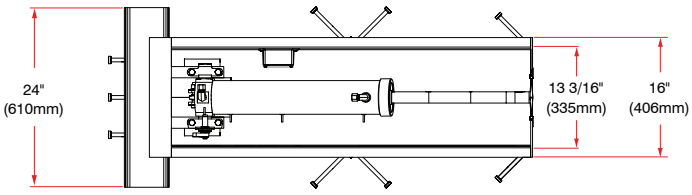

H - RVR303 EXTENSION BOX	
HEIGHT	DESCRIPTION
24 7/8" (632mm)	Pit, Standard
29 7/8" (759mm)	Optional, 5" Extension
32 7/8" (835mm)	Optional, 8" Extension

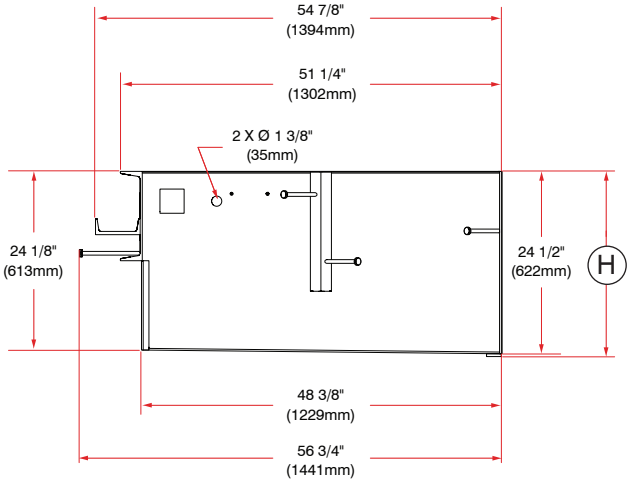

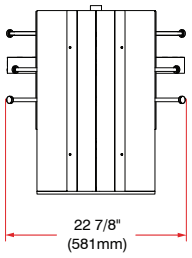

Pit leveler standard dimensions shown.

10.4 GUIDANCE CHANNEL ASSEMBLY

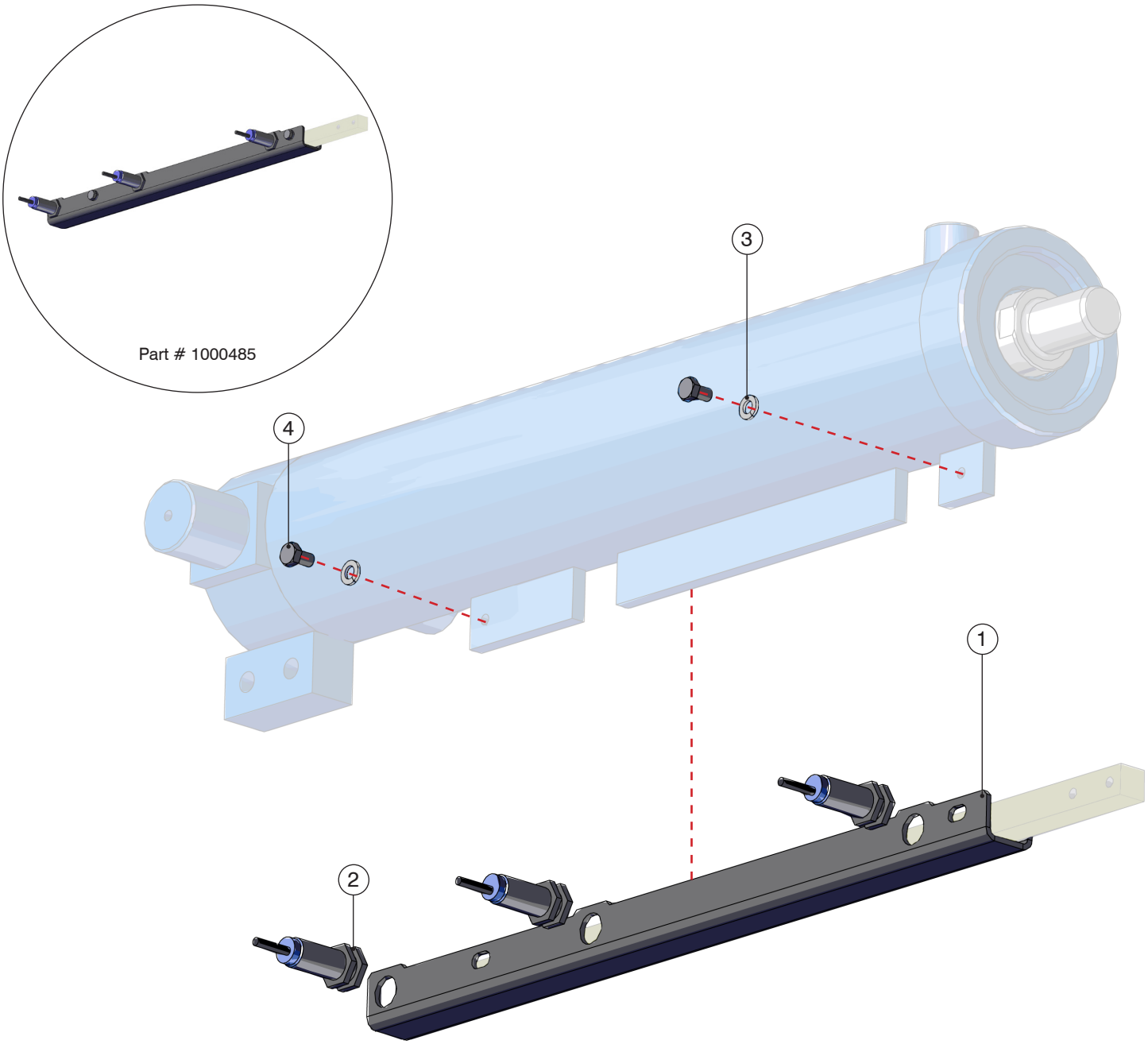

RVR303 GUIDANCE CHANNEL ASSEMBLY # 1000485			
ITEM	QTY.	PART NO.	DESCRIPTION
1	1	1000483	Guidance Channel
2	3	028-200	Proximity Sensor
3	2	012-200	Spring Lock Washer 5/16
4	2	010-03	Cap Screw 5/16-18 x 1/2

10.5 POWERPACK PART IDENTIFICATION

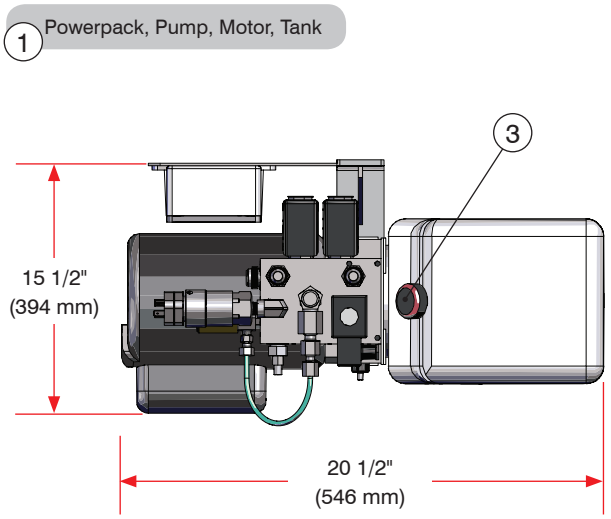

Top View – Wall Mount

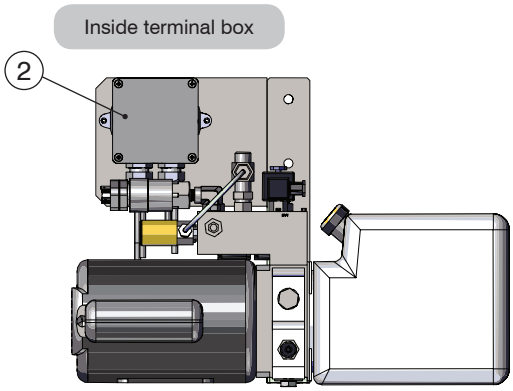

Front View – Wall Mount

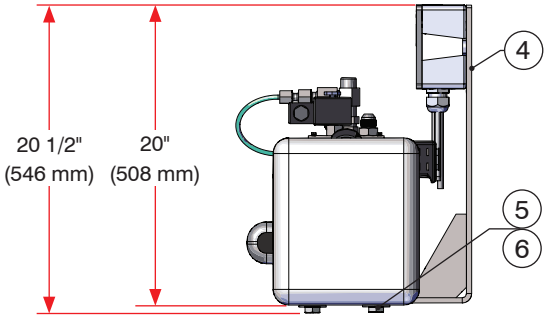

Side View (Tank End) – Wall Mount

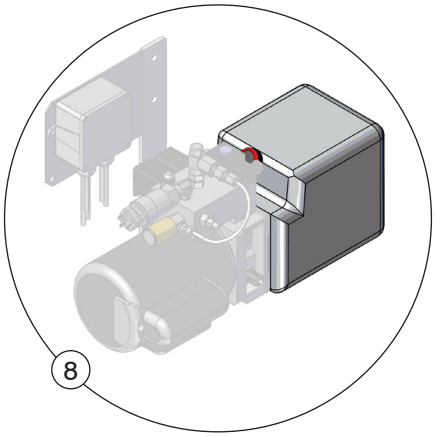

Powerpack Tank Kit

RVR303 POWERPACK ASSEMBLY # 1002880				
ITEM	QTY	PART NO.	DESCRIPTION	ITEM#1
1	1	1002880	RVR303 PP 1PH-115/230V-60HZ	033-464
		1002880-1	RVR303 PP 3PH-230/460V-60HZ	033-465
		1002880-2	RVR303 PP 3PH-575V-60HZ	033-466
2	1	026-H34	RVR303 Remote I/O Harness (See Section 10.8)	

RVR303 POWERPACK ASSEMBLY # 1002880				
ITEM	QTY	PART NO.	DESCRIPTION	ITEM#1
3	1	080-538	RVR303 Powerpack Tank Breather Cap	
4	1	23-014590	Wall Bracket	
5	2	010-170	Hex Head Cap Screws M10x20	
6	2	012-263	Flat Washers (U.S.) 7/16"	
7	1	See Sec. 7.0	Hydraulic Oil	
8	1	080-K007	Tank (Reservoir Oil) Kit	

10.6 CONTROLS

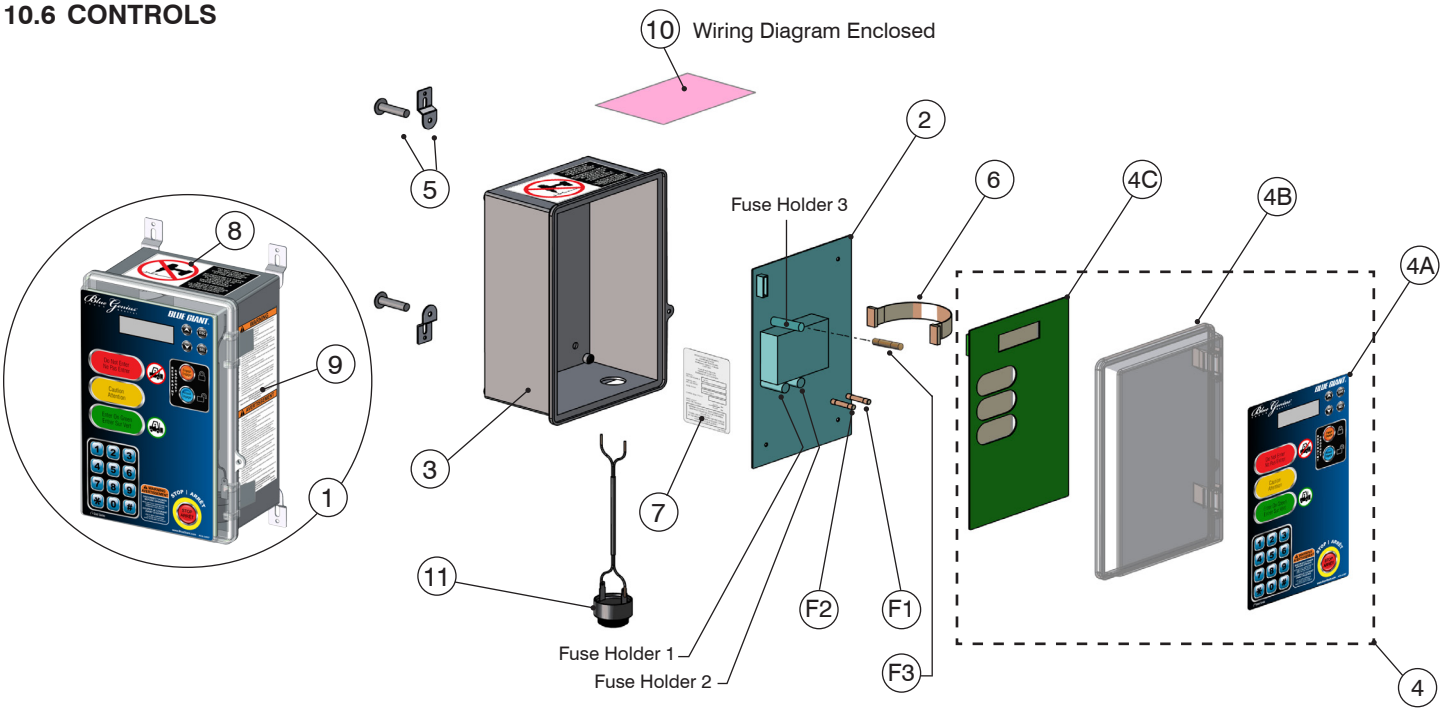

COMPLETE CONTROL STATION ASSEMBLY - ITEM 1 (Example BGG0S1115F)							
ITEM	SINGLE PHASE						
	◊	FUSE	QTY	PART NO.	DESCRIPTION	ASSY PART #	*
2	F1	A	1	026-PB1115	Power Board Sub-Assembly † (1PH 115V 50-60HZ)	BGG0S1115	F
	F2	E	1				S
	F1	C	1	026-PB1230	Power Board Sub-Assembly † (1PH 230V 50-60HZ)	BGG0S1230	F
	F2		1				S
	THREE PHASE						
	◊	FUSE	QTY	PART NO.	DESCRIPTION	ASSY PART #	*
	F1	C	1	026-PB3230	Power Board Sub-Assembly † (3PH 230V 50-60HZ)	BGG0S3230	F
	F2		1				S
	F1	F	1	026-PB3400	Power Board Sub-Assembly † (3PH 400V 50-60HZ)	BGG0S3400	F
	F2		1				S
	F1	G	1	026-PB3460	Power Board Sub-Assembly † (3PH 460V 50-60HZ)	BGG0S3460	F
	F2		1				S
	F1	H	1	026-PB3575	Power Board Sub-Assembly † (3PH 575V 60HZ)	BGG0S3575	F
	F2		1				S
3			1	025-G010-M	Control Box Enclosure (Includes 4B)		
4			1	Consult Factory	Control Box Lid (4B) with Decal (4A) and Control / Board (4C) (Serial # Required)		
4A			1	038-245EF	Button Decal, English / French		
				038-245ES	Button Decal, English / Spanish		
4B			1	025-G014-M	Cover Only		
4C			1	026-G020	Blue Genius™ Control / Touch Board		
5			1	025-G010-1	Mounting Tabs with Hardware (1 pkg of 4)		

† Includes Fuses

◊ Location on Power Board

ITEM	QTY	PART NO.	DESCRIPTION
6	1	026-G030	Ribbon Cable
7	1	038-284EF	Decal, Serial Plate English / French
		038-284ES	Decal, Serial Plate English / Spanish
8	1	038-283ESF	Decal, Do Not Drill
9	1	038-853EF	Warning Decal, English / French
		038-853ES	Warning Decal, English / Spanish
10	1	026-615-1	Anti-Static Poly Bag (Wiring Diagram Enclosed - Serial # required)
11	1	026-G402	Audible Speaker
F3	1	026-037-1	Fuse, 2.5A, 700V, Fast-Blow 1/4" Glass

AS PER VOLTAGE - SEE ITEM 1			
ITEM	QTY	PART NO.	DESCRIPTION
A	1	026-G100	Fuse, 15A, 250V, Time Delay for 1PH, 110-130V
B	1	026-G101	Fuse, 8A, 250V, Time Delay for 1PH, 208-240V
C	1	026-G102	Fuse, 0.5A, 208-240V, Time Delay for 1 and 3PH
D	1	026-G103	Fuse, 0.25A, 250V, Time Delay for 1PH, 208-240V
E	1	026-G104	Fuse, 0.75A, 250V, 10-130V, Time Delay for 1PH
F	1	026-G105	Fuse, 500mA, 700V, Fast Acting for 3PH, 380-415V
G	1	026-G106	Fuse, 400mA, 700V, Fast Acting for 3PH, 440-480V
H	1	026-G107	Fuse, 315mA, 700V, Fast Acting for 3PH, 575-600V

* Language on decal: F = English / French S = English / Spanish

‡ 115 Volt Control Box Shown

10.7 RESTRAINT JUNCTION BOX

RVR303 REMOTE I/O HARNESS ASSEMBLY # 026-H24			
ITEM	**QTY.**	**PART NO.**	**DESCRIPTION**
1	1	025-G020M	Junction Box 4" x 4" (2 Holes)
2	2	025-174	PG16 Cable Gland
3	2	025-177	PG16 Metal Locknut
4	1	025-179	PG16 Multi-Hole Seal (2 Holes)
5	1	025-175	PG16 Multi-Hole Seal (3 Holes)
6	1	025-172-6	Terminal Block
7	1	026-G033-2400	Communication Cable
8	4	028-200	Proxy Switches

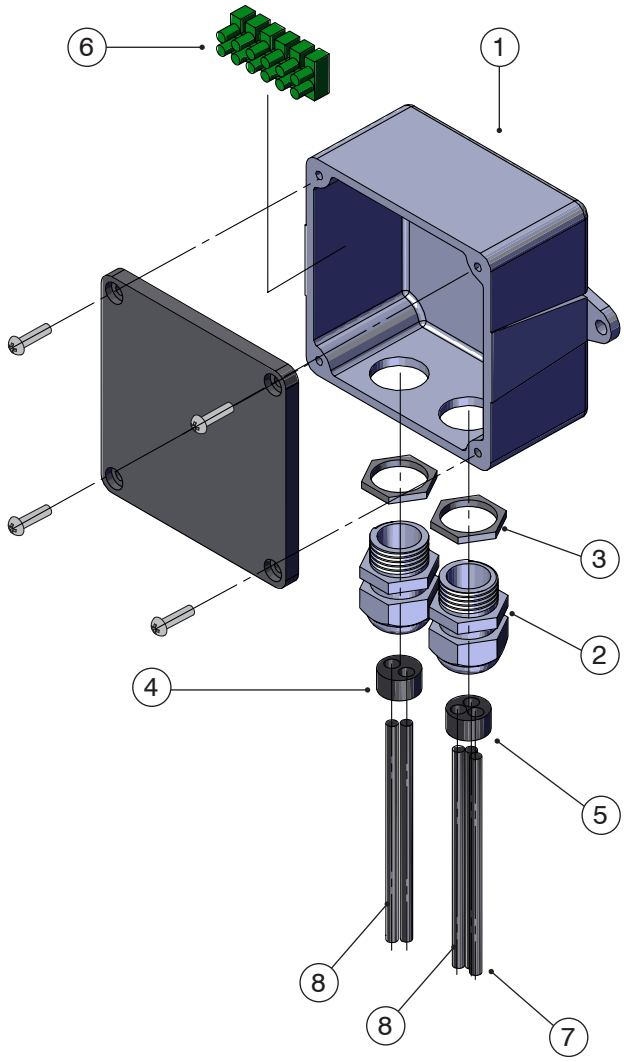

10.8 JUNCTION BOX W/REMOTE I/O

RVR303 REMOTE I/O HARNESS ASSEMBLY # 026-H34			
ITEM	**QTY**	**PART NO.**	**DESCRIPTION**
1	1	025-G020M	Junction Box 4" x 4" (2 Holes)
2	2	025-174	PG16 Cable Gland
3	2	025-177	PG16 Metal Locknut
4	1	025-179	PG16 Multi-Hole Seal (2 Holes)
5	1	025-175	PG16 Multi-Hole Seal (3 Holes)
6	1	026-G025	Remote I/O Board
7	1	038-279	Decal, I/O Circuit Board
8	4	026-G074	Solenoid Valve Connector
9	1	026-H16-1	Comms. - Harness w/ cable - 30'

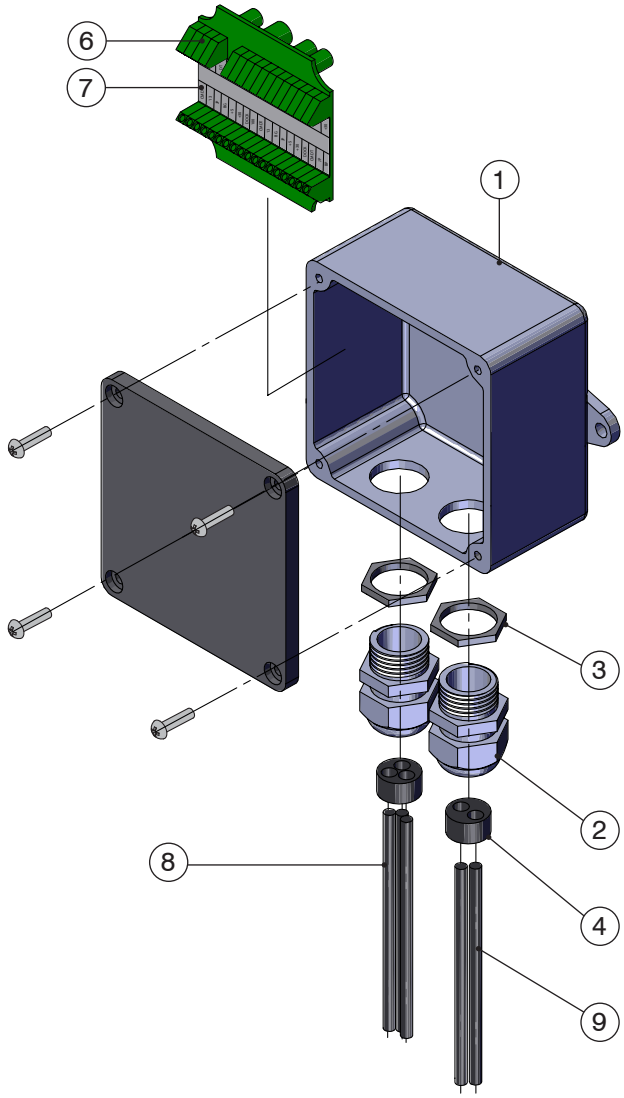

10.8.1 JUNCTION BOX DIMENSIONS

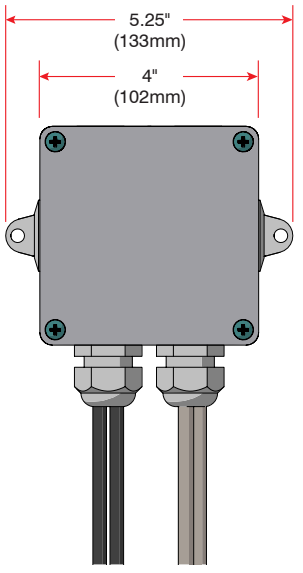

Junction Box - Front View

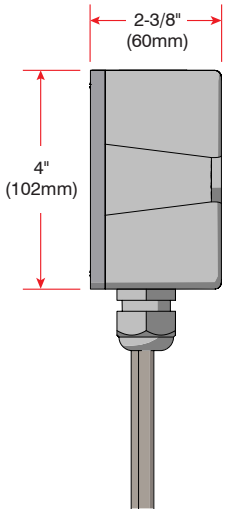

Junction Box - Side View

10.9 DOCK INTERLOCK SENSOR

- Ties sequence of dock leveler to vehicle restraint operation
- Loading dock safety is improved with accurate operation sequence
- Interior traffic light and restraint release operation relies on interlock capability
- Mounted at parked position of any leveler

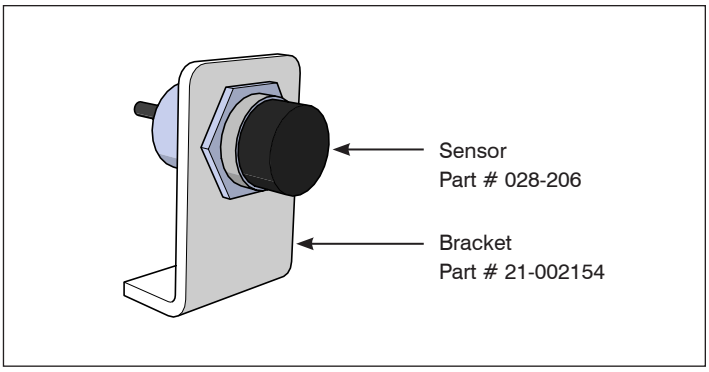

Dock interlock sensor (home/lip sensor), part # 26-011290.

10.10 EXTERIOR TRAFFIC LIGHT / MIRROR IMAGE SIGN

Slim-build LED traffic lights and mirror image driver warning sign improve loading dock safety.

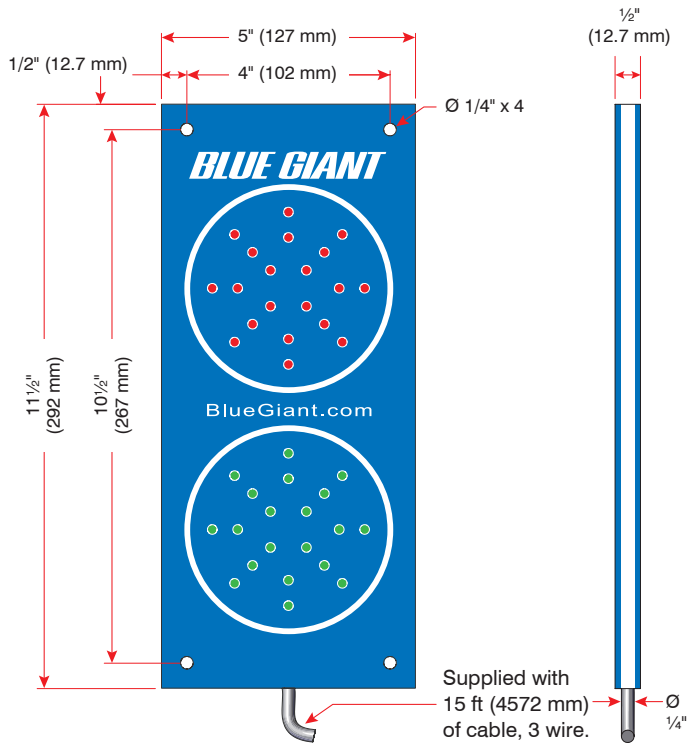

Exterior driver traffic light, part # 032-461.

NOTE: Mount to a flat surface. DO NOT deform light housing with irregular wall surface.

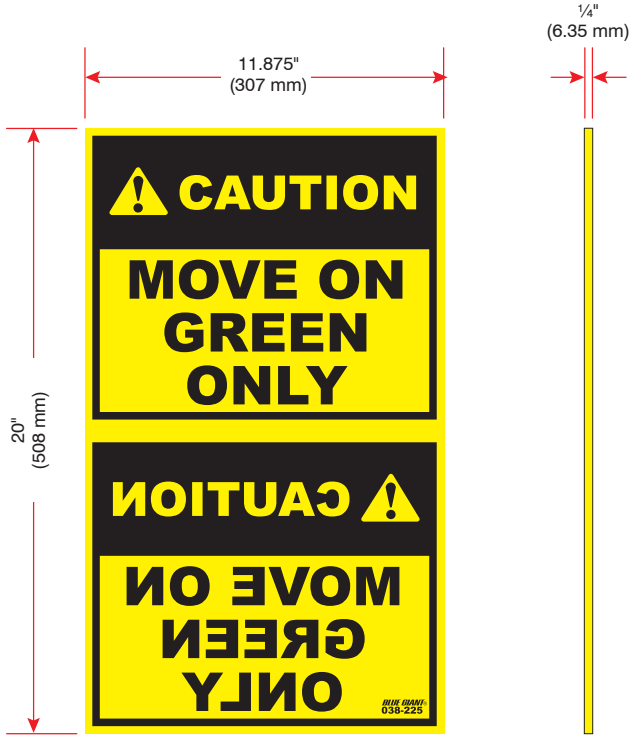

Exterior driver warning sign, part # 038-225 (French 038-225F / Spanish 038-225S).

11.0 OPTIONAL COVER PLATE

The RVR303 cover plate prevents debris from entering the body of the unit, greatly reducing maintenance.

NOTE: Checkered steel option shown. The smooth steel cover plate is fitted with a notch.

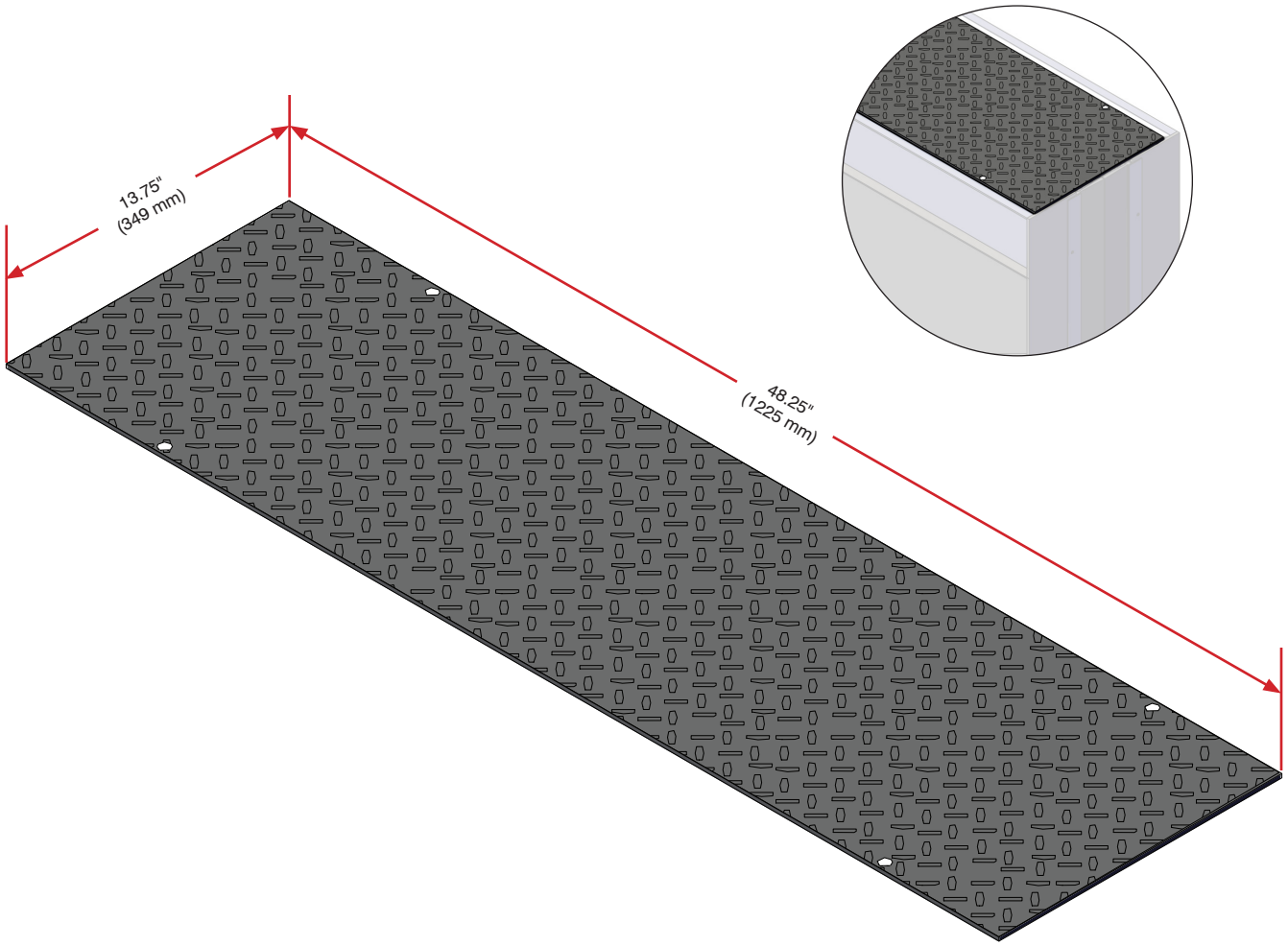

RVR303 COVER PLATE

TYPE	PART NO.	APPLICATION	QTY. REQ'D
Checkered Steel	1001727	Vertical docks	1
Smooth Steel	1001727-1	Pit docks	1

12.0 VEHICLE RESTRAINT TROUBLESHOOTING

WARNING

Do not attempt to install, make repairs or adjustments. Only a trained and authorized service technician should perform the installation process. Contact your local dealer or distributor for assistance.

PROBLEM	PROBLEM CAUSE
The restraint hook will not rise when the **ENGAGE** button is touched.	1. Faulty wiring, connection or broken wire. Refer to electrical wiring diagram. 2. Power source problem. Check incoming voltage and compare to data nameplate voltage. 3. Restraint apparatus is seized. Check for foreign objects such as broken wooden pallet splitters. 4. The controls are in bypass mode. Press RELEASE button and then ENGAGE button. 5. Restraint option not chosen in menu.
The restraint hook will not lower when the **RELEASE** button is touched.	1. Faulty wiring or connections. Refer to electrical wiring diagram. 2. Hook was improperly engaged. 3. Restraint apparatus is blocked from coming down. Check for foreign objects. 4. The dock leveler deck is not restored to the home position properly.
Restraint is engaged but the inside light is still red.	1. Dock leveler not deployed. Dock interlock sensor still sees lip. 2. Dock interlock damaged. Replace.
Restraint works but LED cover lights are not lit. LCD display is working.	1. Power source for lights is damaged. Replace control board.
Exterior traffic lights are dim, displaying incorrectly (wrong color) or malfunctioning (only one light works).	1. Check wiring to lights. Ensure that the +24 red exterior light is connected to terminal # 12 on the control terminal strip label 1 to 14 and that the +24 green light is connected to terminal #13 and the common of the lights are connected to terminal #14. 2. Lights common wire is terminated in wrong terminal (other than #14).
The restraint is in the parked position and the inside light is green with yellow light flashing.	1. The restraint is in the bypass mode and the dock interlock sensor is not active.
The restraint is powered on. LCD screen displays the message 'Restraint is Bypassed'. The control panel lights are green and flashing yellow while the exterior traffic light is red.	1. The dock leveler is either not parked or the home sensor does not detect it as being in the parked position.

12.0 VEHICLE RESTRAINT TROUBLESHOOTING CONT'D.

WARNING

Do not attempt to install, make repairs or adjustments. Only a trained and authorized service technician should perform the installation process. Contact your local dealer or distributor for assistance.

PROBLEM	PROBLEM CAUSE
Restraint hook releases from ICC bar and lowers, but does not retract.	1. SV1 solenoid still active. Check wiring. 2. SV1 solenoid stem/cartridge damaged. Replace solenoid. 3. SV2 solenoid not active. Check wiring. 4. SV2 solenoid stem/cartridge damaged. Replace solenoid.
Restraint hook releases, lowers, and retracts fully, but motor continues to run.	1. Restraint home sensor not active. Check wiring and/or sensor range.
Restraint hook, after being full retracted, remains in the lowered position when power is tuned off.	1. SV3 solenoid damaged. Replace solenoid. 2. Tilt cylinder has internal damage. Replace cylinder. 3. Foreign object in pathway. Remove obstruction and clean pit area.
Restraint hook does not hold ICC bar tightly, inside lights turn GREEN.	1. Pressure switch set to low. Adjustment should be performed by qualified personnel 2. Wrong hydraulic oil used. Replace hydraulic oil with approved type.
Restraint hook engages ICC bar but does not shut off. Motor runs in relief and times out set time.	1. Pressure switch inactive. Check wiring. 2. Pressure switch faulty. Replace.
Restraint operates slowly.	1. Low oil flow. Check hydraulic hoses for kinks or leaks. 2. Blockage in hydraulic system. Clean and flush system, add new hydraulic oil. See manual for approved types. 3. Pressure relief is set too low. Adjust to proper settings (650 psi).
Restraint does not fully extend.	1. Hydraulic oil too low. Add hydraulic oil as to not overfill tank. Add oil to tank with both hydraulic cylinders retracted. See manual for approved hydraulic oils.
Restraint does not operate, motor runs.	1. Motor direction reversed. If three phase, interchange any two of the motor power leads. If single phase, check motor nameplate for proper connection. 2. Motor connected to wrong voltage. Check line voltage to motor's nameplate voltage.

12.0 VEHICLE RESTRAINT TROUBLESHOOTING CONT'D.

WARNING

Do not attempt to install, make repairs or adjustments. Only a trained and authorized service technician should perform the installation process. Contact your local dealer or distributor for assistance.

PROBLEM	PROBLEM CAUSE
Restraint does not operate, motor does not run, but motor makes a humming sound.	1. Single phase condition on three phase motor. Check that all three legs of power source are feeding the motor. 2. Wrong voltage selected on motor connection. Check line voltage and motor connection for proper voltage. 3. On a single phase motor, the capacitor and/or start switch is open. Centrifugal switch is broken or start winding is open. Replace motor.
Restraint does not operate, motor does not run, Blue Genius™ Touch Control Panel powers on.	1. RVR303 motor leads are connected to wrong output. RVR303 connects to motor 1 output. 2. RVR303 motor is not connected at motor terminal box. Check nameplate for proper connection. 3. Wrong output selected in program. Call tech support. 4. ENGAGE touch button on Blue Genius™ is faulty. Replace front face. 5. Home sensor is inactive, out of range, not connected, or not installed.
Restraint lowers fully, extends fully, but will not raise. Motor is running in pressure relief.	1. Solenoid SV3 electrically on. Check for shorts. 2. SV3 solenoid stem/cartridge is not shifting when de-energized. Replace solenoid. 3. Tilt cylinder internal spring broken. Replace cylinder. 4. Mechanical binding. Check all pivot points for possible seizing, foreign debris. 5. Tilt antenna malfunction. Check sensor and antenna for proper setup.
Restraint does not fully lower, but fully extends.	1. Hook is blocked. Check for foreign debris. 2. Tilt antenna out of adjustment. Set tilt antenna to proper setup position. 3. Pressure relief valve set too low. Adjust to proper settings. See manual.
Restraint fully lowers, but does not extend.	1. SV1 solenoid is active. Check wiring. 2. SV1 stem/cartridge is damaged. Replace solenoid. 3. Low hydraulic oil. Fill to proper level. 4. Hook down antenna not in range. Adjust to proper setting. 5. SV2 solenoid is active. Check wiring. 6. SV2 solenoid stem/cartridge damaged. Replace solenoid. 7. SV4 unloader solenoid faulty. Replace valve.
Restraint extends fully, but does not lower.	1. Tilt antenna out of adjustment. Set tilt antenna to proper setup position. 2. SV1 not energizing. Check connections and proper lead termination. 3. SV1 stem/cartridge not shifting. Replace solenoid. 4. SV3 not energizing. Check connections and proper lead termination. 5. SV3 stem/cartridge not shifting. Replace solenoid.

12.0 VEHICLE RESTRAINT TROUBLESHOOTING CONT'D.

WARNING

Do not attempt to install, make repairs or adjustments. Only a trained and authorized service technician should perform the installation process. Contact your local dealer or distributor for assistance.

PROBLEM	PROBLEM CAUSE
Restraint does not extend or lower. Motor runs in relief pressure.	1. Pressure relief set too low. Adjust to proper setting. 2. SV1 is not energized and SV2 is energized. Check wiring. 3. SV1 is not energized and SV2 stem/cartridge is damaged. Check wiring and/or replace solenoid. 4. SV3 not energizing. Check wiring. 5. SV3 stem/cartridge damaged. Replace solenoid. 6. Obstruction in pathway of restraint hook. Remove any obstructions and clean area. 7. Lowering cylinder damaged. Replace. 8. Pivot pin(s) seized. Replace pin(s) and lubricate. 9. Hydraulic hose pinched or damaged. Replace. 10. SV3 coil has open circuit. Replace coil wih proper size and voltage.

13.0 BLUE GENIUS™ LCD MESSAGES

WARNING

Do not attempt to install, make repairs or adjustments. Only a trained and authorized service technician should perform the installation process. Contact your local dealer or distributor for assistance.

MESSAGE	EXPLANATION
'**Fault 60**' Out sensor	1. Arm out sensor fault. Check sensor for in range and wiring. **NOTE:** Blue Genius™ was expecting arm out sensor to be on.
During self test mode the following message appear: '**Remote I/O Bad**'	1. Faulty wiring. Communication cable not connected or damaged. 2. Communication chip(s) faulty. 3. Faulty wiring. Check communication cable wires for loose connections. 4. Remote I/O is faulty. Replace. 5. Blue Genius™ power board is faulty. Replace.
'**Please restore Dock Leveler**'	1. Dock interlock sensor (home/lip) is in-active, out of range. 2. Dock interlock sensor (home/lip) is not connected. 3. Faulty wiring. 4. Dock not in stored/home position.
'**ICC Bar not in Range**'	1. Restraint arm retracted and did not find ICC bar in preset range.
'**Fault 10**' Communication error	1. Faulty wiring, check for loose or broken communication cable wire(s). 2. Noise interference, check routing of communication from Blue Genius™ controls to remote devices.
'**Fault 61**' Range sensor	1. Arm range sensor fault. Check sensor for in range and wiring. **NOTE:** Blue Genius™ was expecting range sensor to be on.

14.0 WIRING DIAGRAMS

NOTICE

The following wiring diagrams are sample configurations only. Wiring diagrams specific to your needs will be provided inside the control panel and/or as part of your submittal package.

14.1 WIRING DIAGRAM—115V SINGLE PHASE

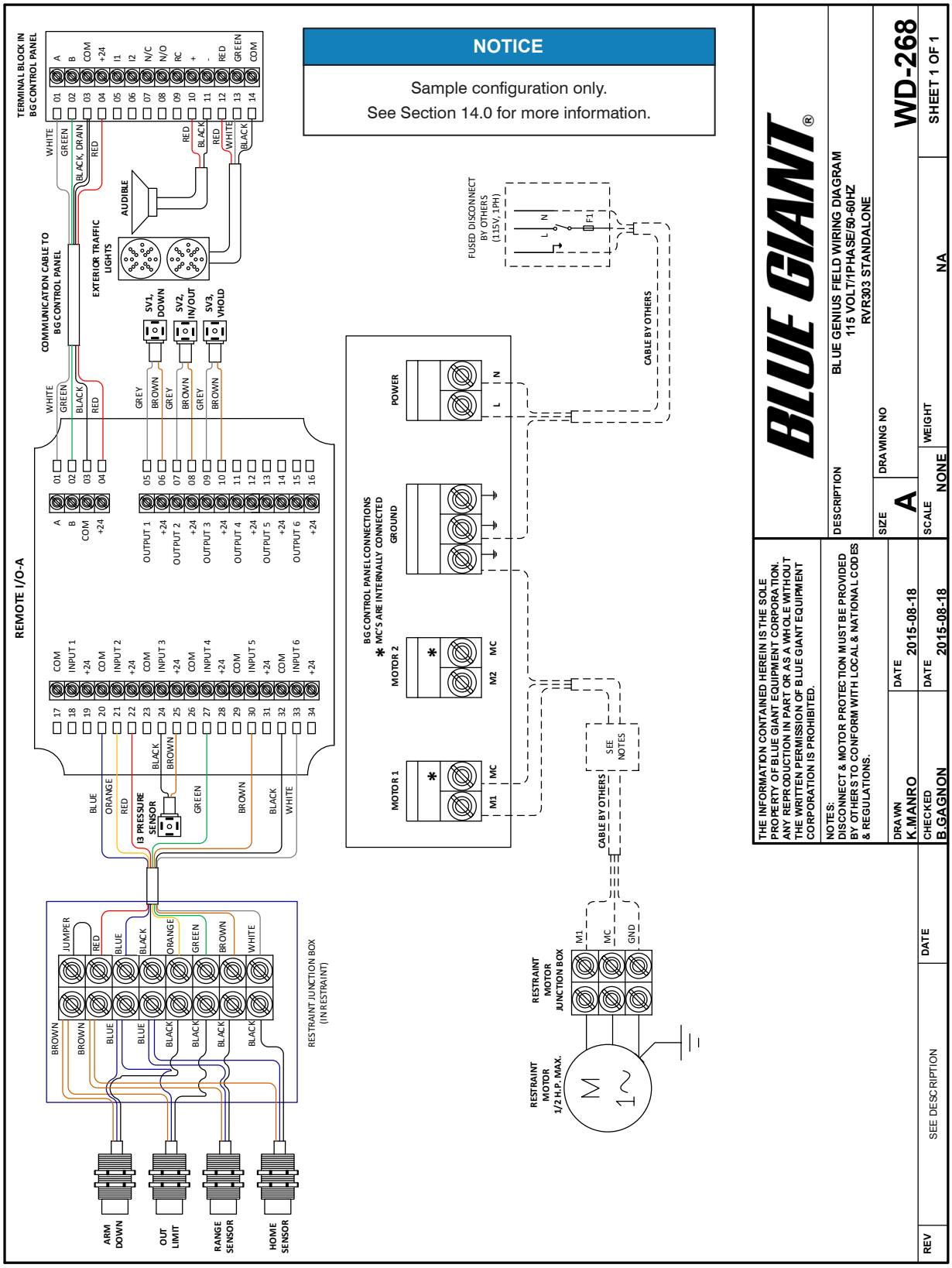

14.2 WIRING DIAGRAM—230-575V THREE PHASE

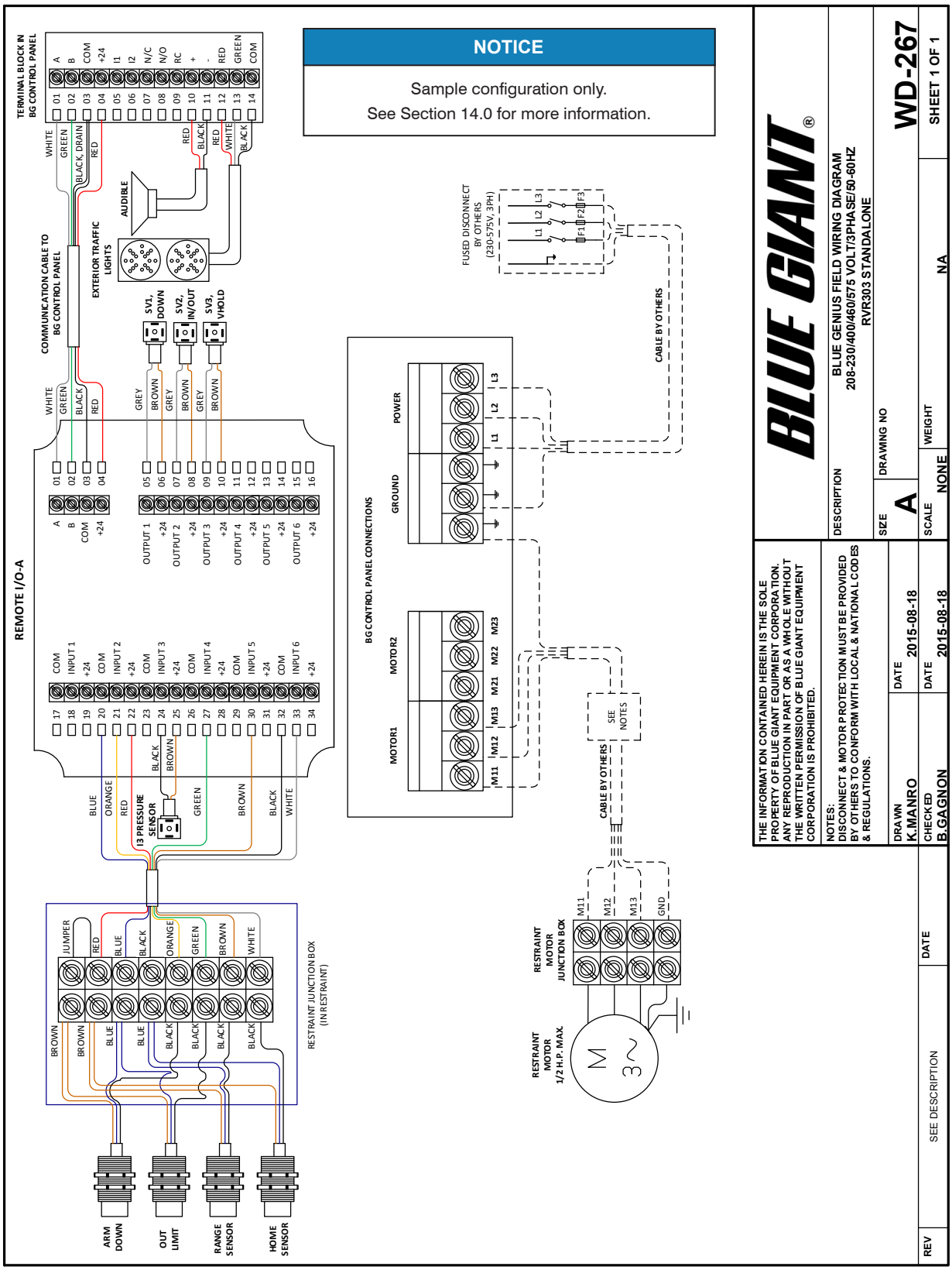

NOTES

NOTES

BLUE GIANT®
BLUE GIANT EQUIPMENT CORPORATION

Corporate 85 Heart Lake Road South
Brampton, ON, Canada L6W 3K2
t 905.457.3900 **f** 905.457.2313

USA 6350 Burnt Poplar Road
Greensboro, NC 27409
www.BlueGiant.com

If calling within North America: **t** 1.800.668.7078 **f** 1.888.378.5781 © Copyright Blue Giant Equipment Corporation 2015